OKPOL®





BG ПОКРИВНИ ПРОЗОРЦИ
CZ STŘEŠNÍ OKNA
DE DACHFENSTER
ES VENTANA DE TEJADOS
FR FENÊTRES DE TOIT
GB ROOF WINDOWS
GR ΠΑΡΑΘΥΡΑ ΟΡΟΦΗΣ
HU TETŐTÉRI ABLAKOK
IT FINESTRE PER TETTI
MK ПРОЗОРЦИ НА ПОКРИВОТ
PL OKNA DACHOWE
PT JANELAS DE SÓTÃO
RO GEAMURI DE ACOPERIȘ
RU МАНСАРДНЫЕ ОКНА
SE TAKFÖNSTER
SK STREŠNÉ OKNÁ
TR çatı pencereleri

ISOV, ISOM, ISOX, VSOV, VSOM, NK, NKV, NKM,

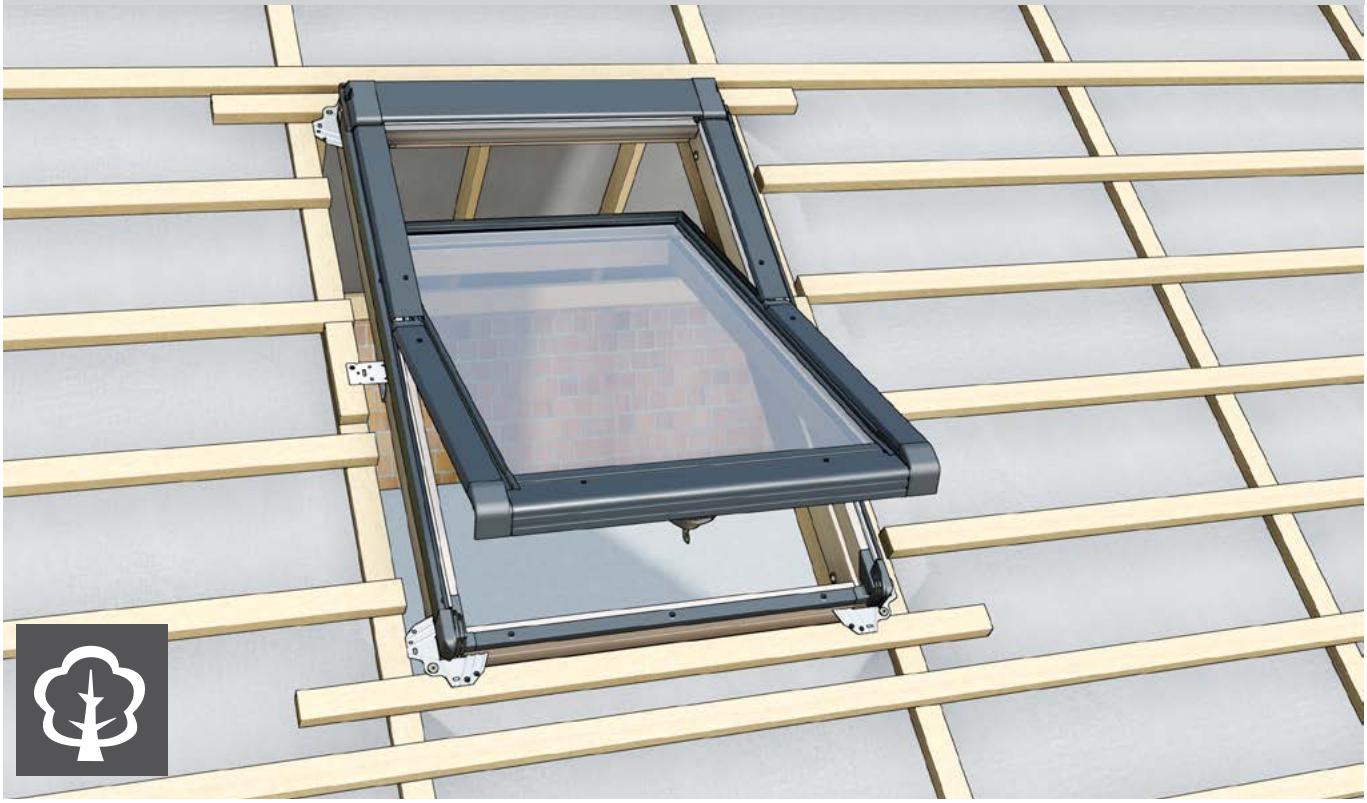

IGOV, IGOM, IGOX, BGOV, VGOV, VGOM,

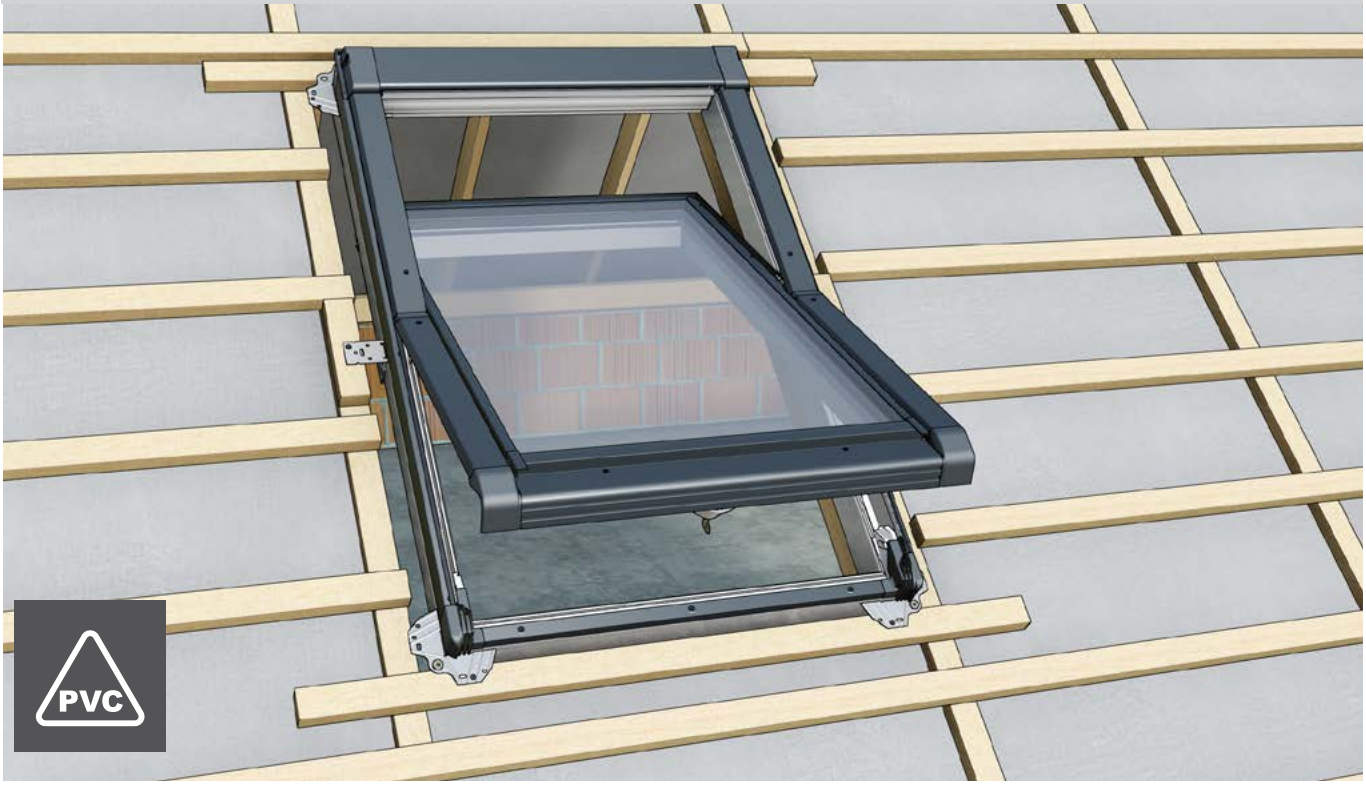

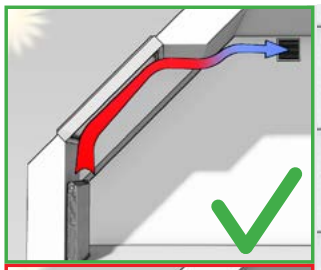

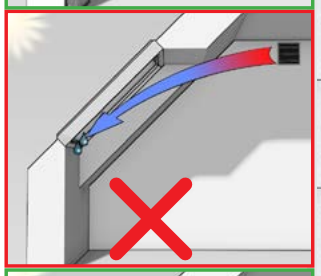

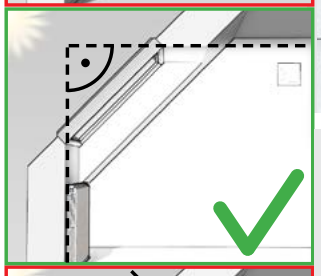

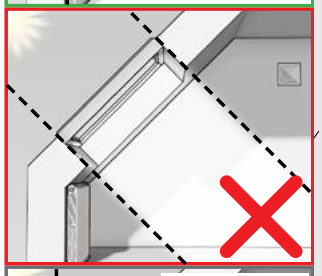

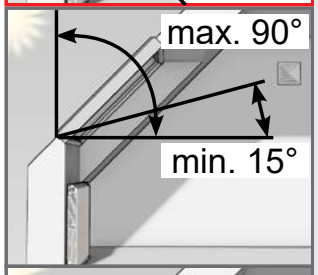

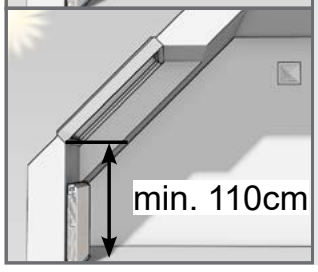

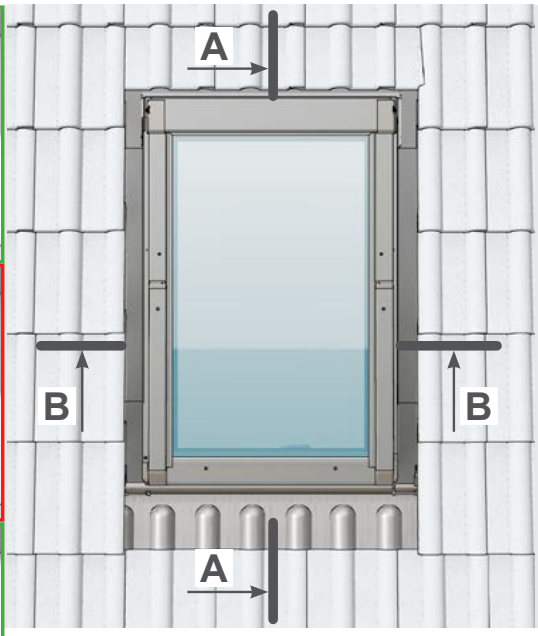

B-B

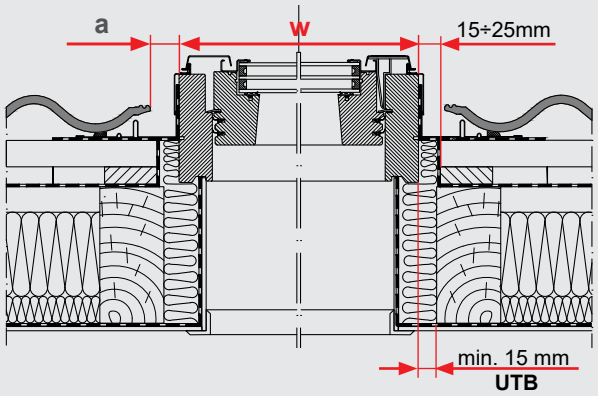

A-A

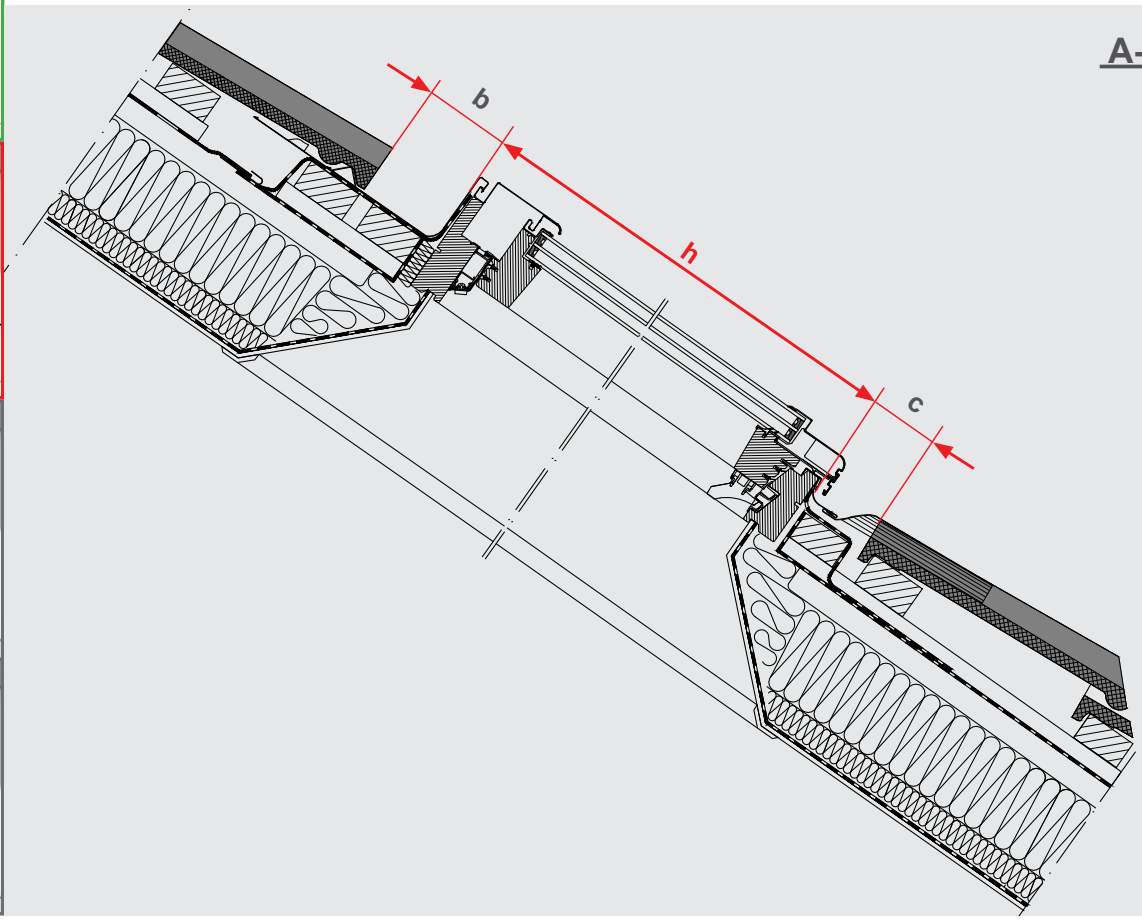

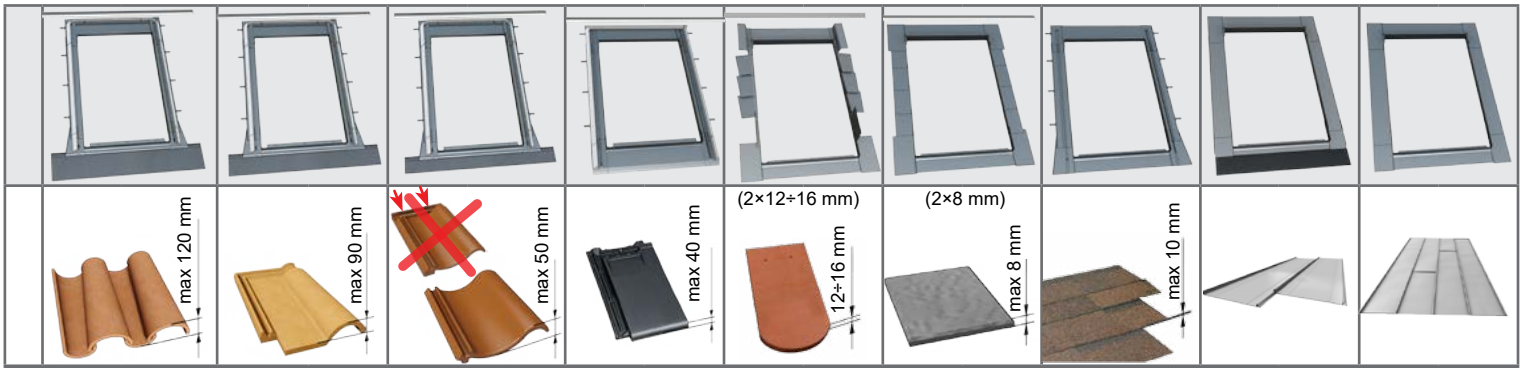

	H12 [mm]		H9 [mm]		H5 [mm]		D [mm]		LH [mm]		L [mm]		P [mm]		BPH9 [mm]		R [mm]	
a	min. 30	max. 60	min. 30	max. 60	min. 30	max. 60	min. 45	max. 50	min. 45	max. 50	min. 0	max. 20	min. 45	max. 50	0	0	min. 90	max. 130
b	60 ÷ 150		60 ÷ 150		60 ÷ 150		60 ÷ 150		60 ÷ 150		60 ÷ 150		60 ÷ 150		60 ÷ 10		max 200	
c	90 ÷ 110		90 ÷ 110		60 ÷ 70		100 ÷ 110		20 ÷ 50		20 ÷ 50		20 ÷ 50		60÷70		50÷120	

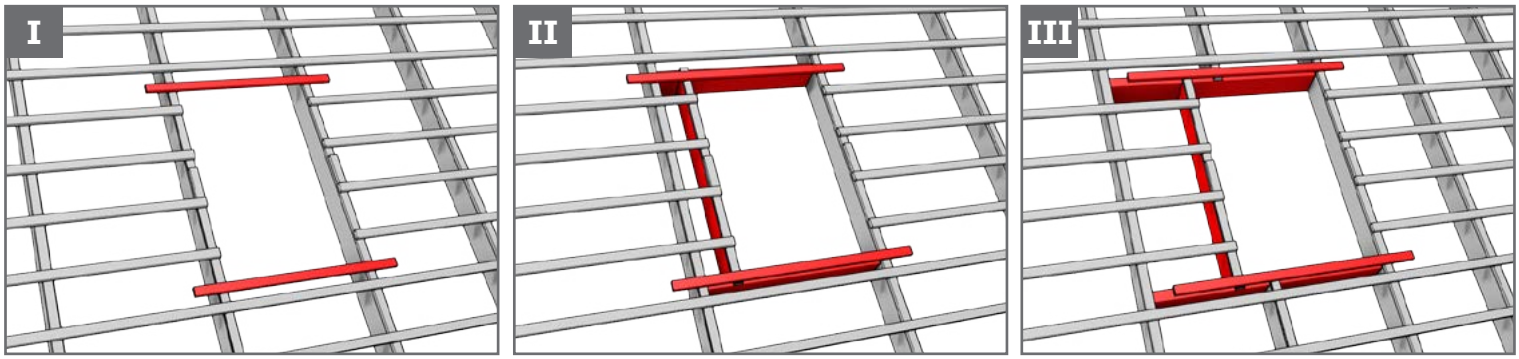
I
II
III

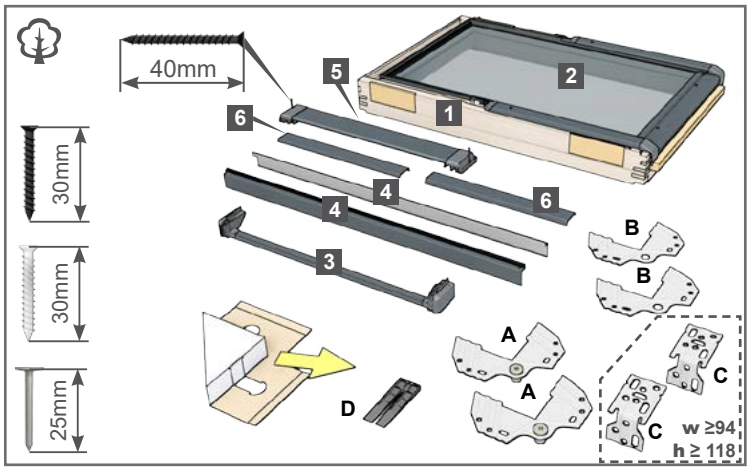
40mm
30mm
30mm
25mm
w ≥94
h ≥ 118

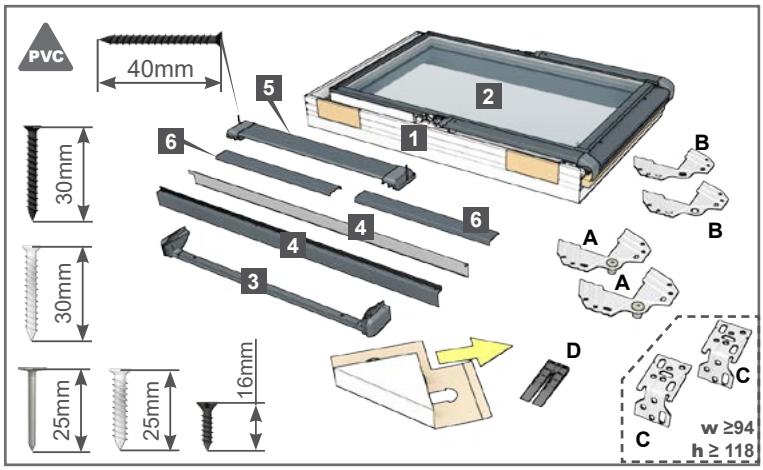
PVC
40mm
30mm
30mm
25mm
25mm
16mm
w ≥94
h ≥ 118

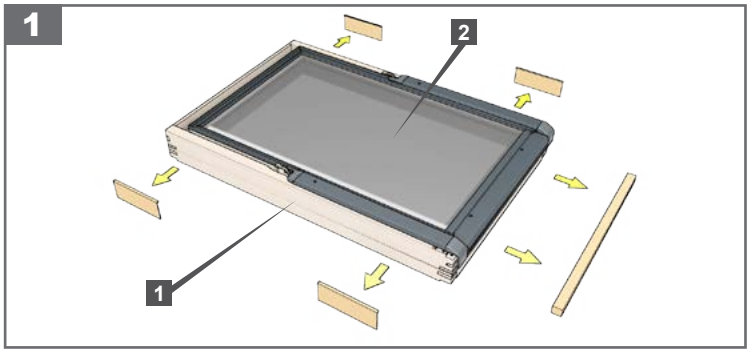
1

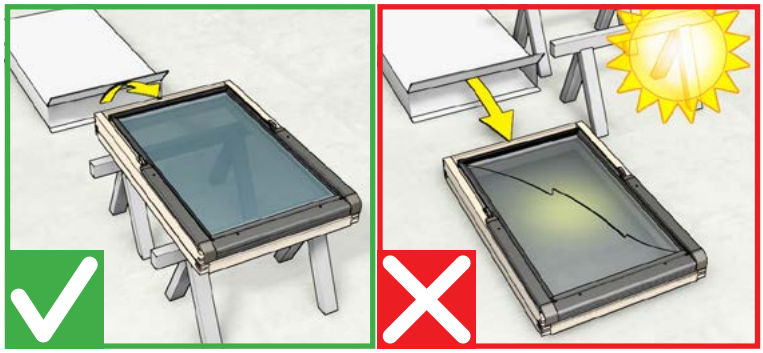

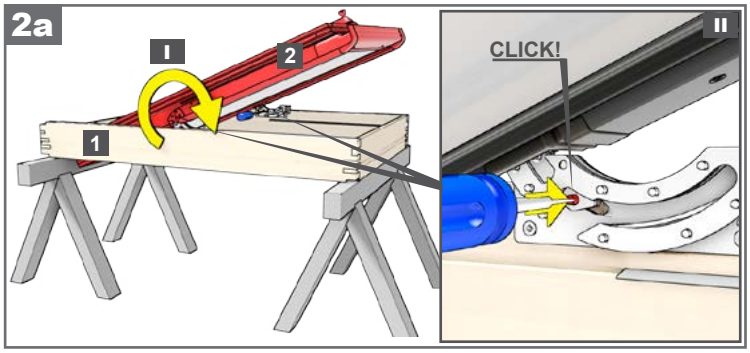
2a
I
II
CLICK!

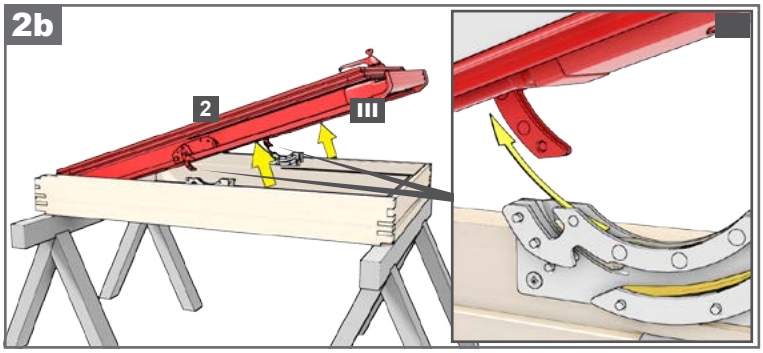
2b
III

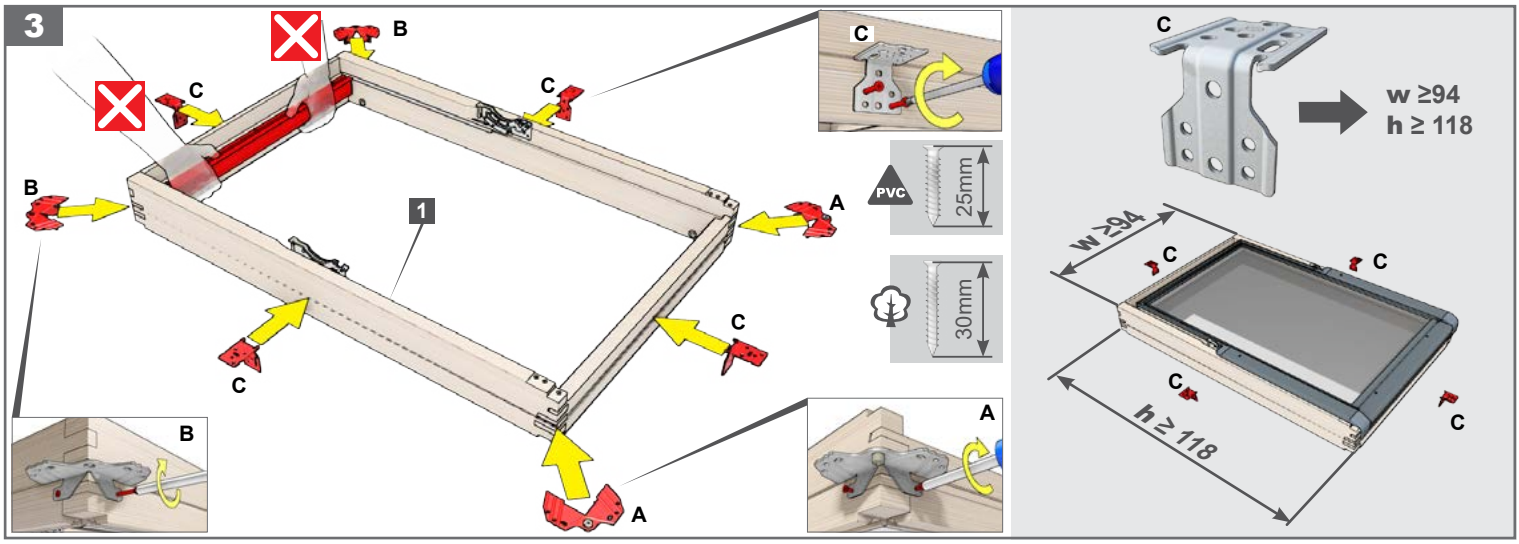
3
PVC
25mm
30mm
w ≥94
h ≥ 118

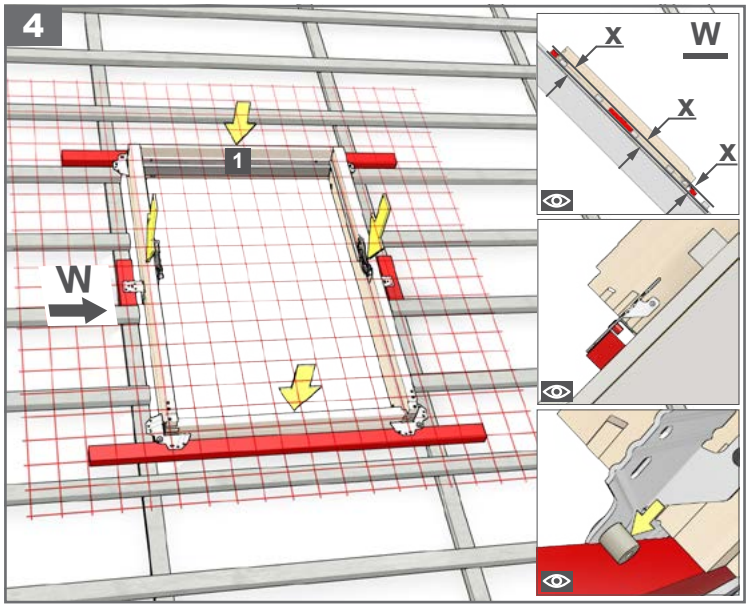
4
1
W
X
W
X
X

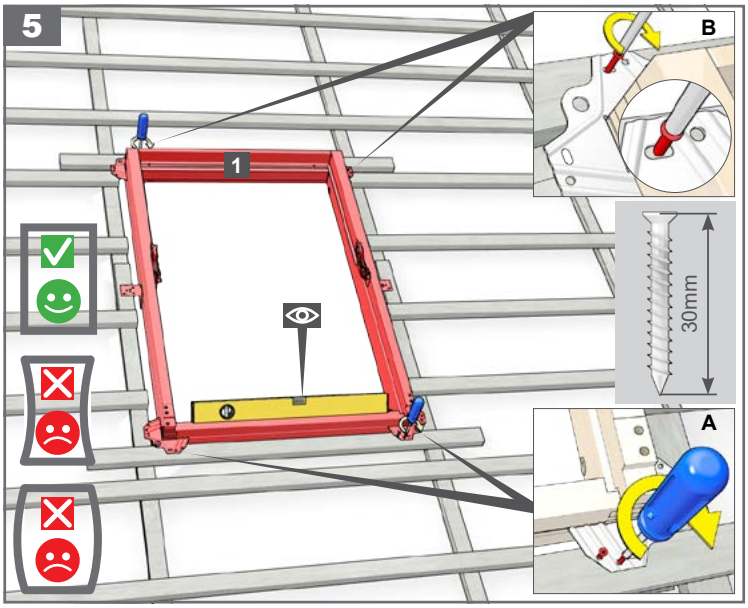
5
1
B
30mm
A

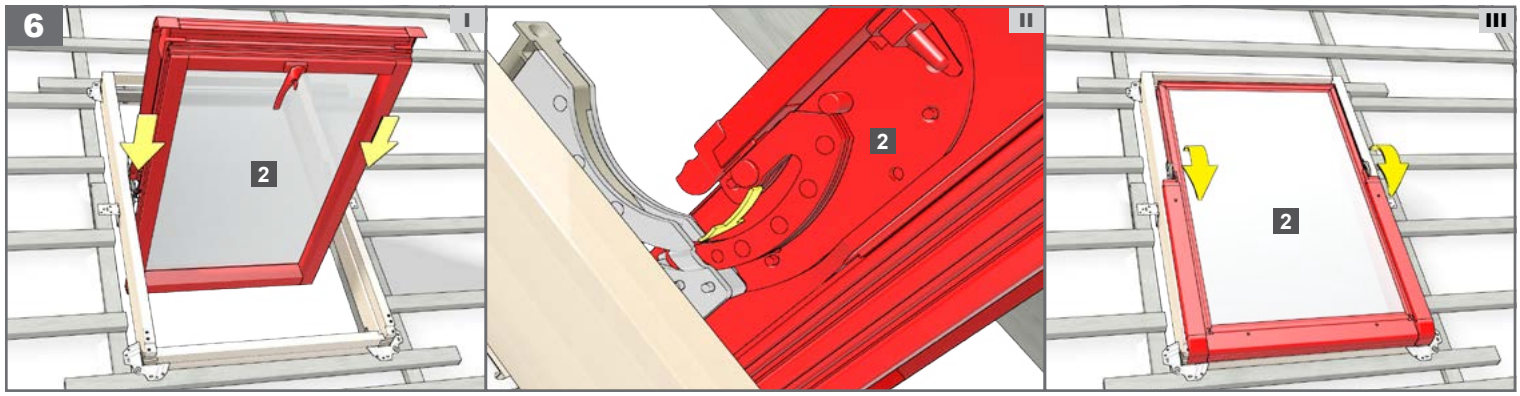
6
I
2
II
2
III
2

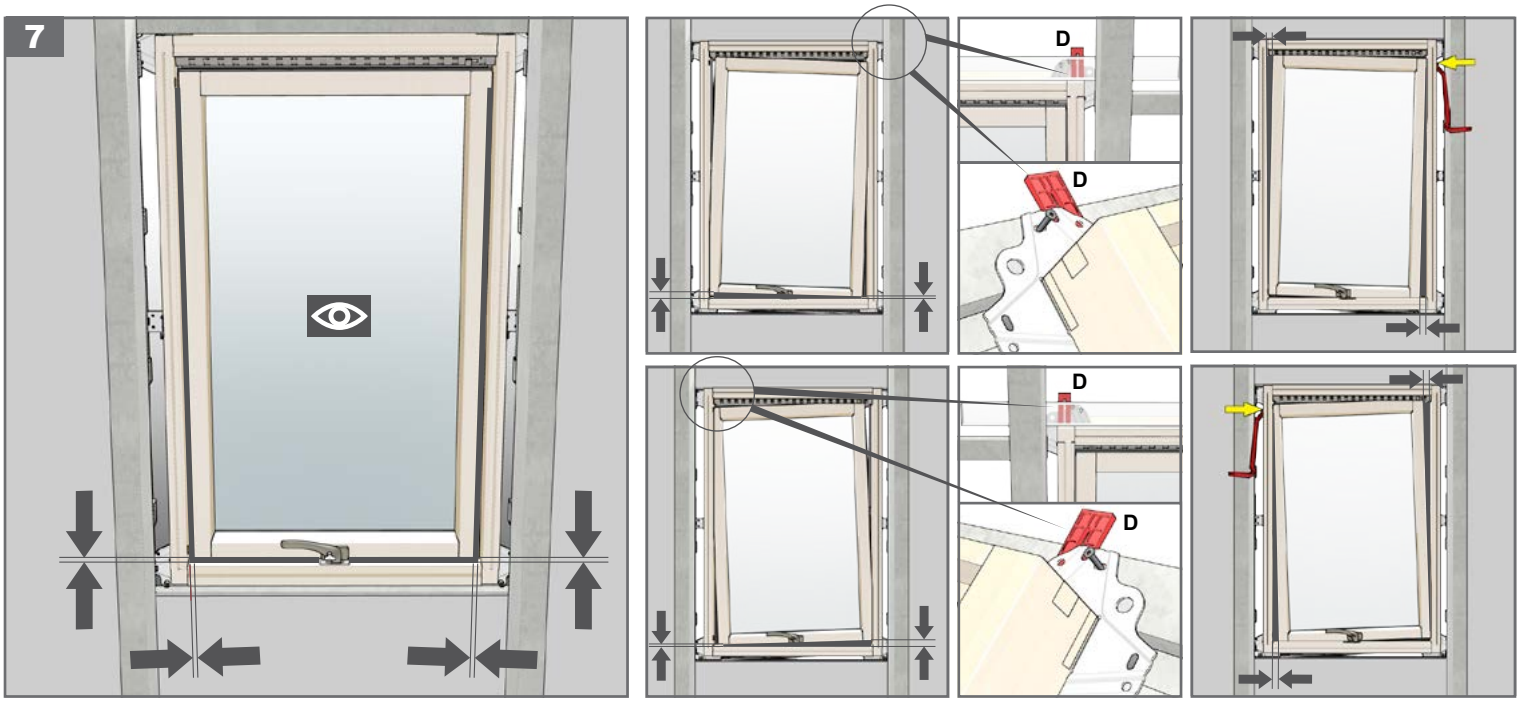
7
D
D
D
D

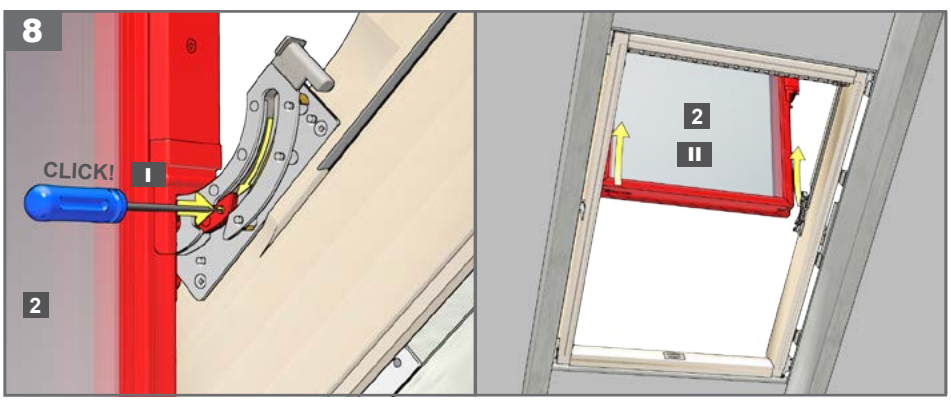
8
CLICK!
I
2
2
II

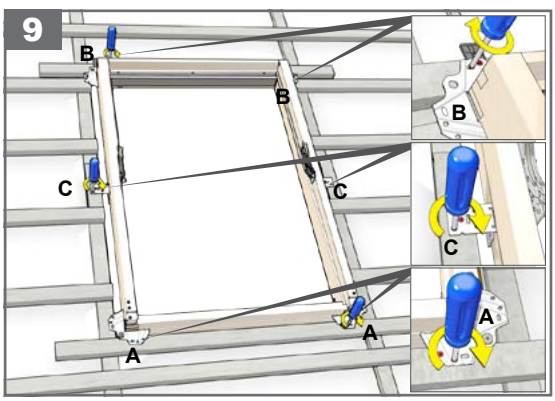
9
B
B
B
C
C
C
A
A
A

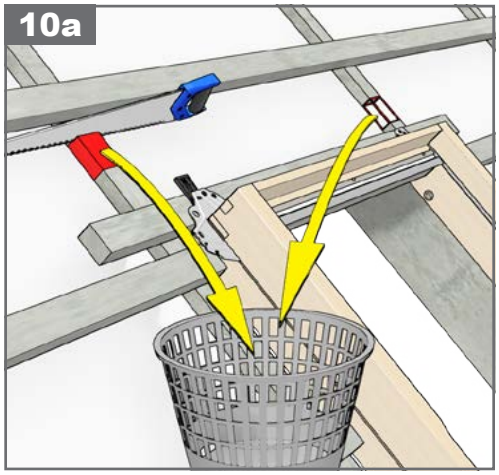
10a

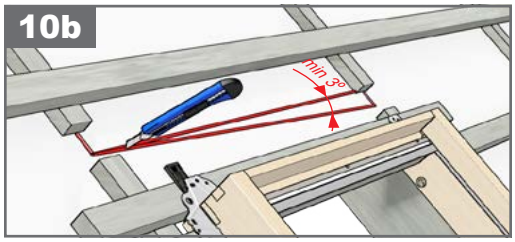
10b
min 3°

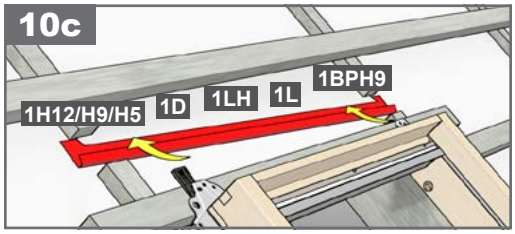
10c
1H12/H9/H5
1D
1LH
1L
1BPH9

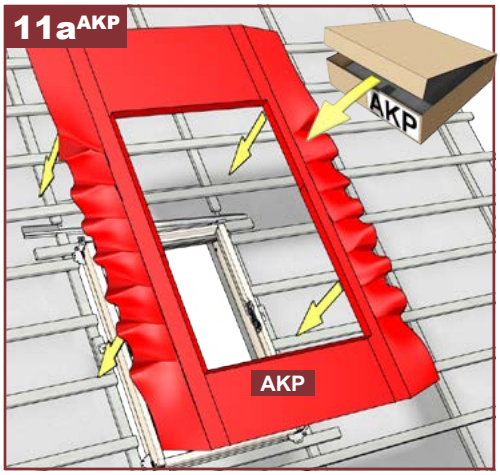
11a AKP
AKP
AKP

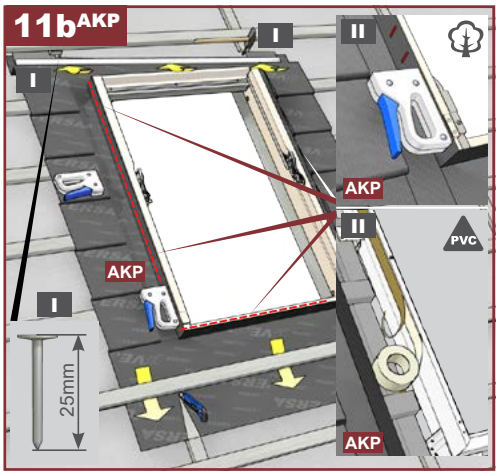
11b AKP
I
II
AKP
II
PVC
AKP
I
25mm
AKP

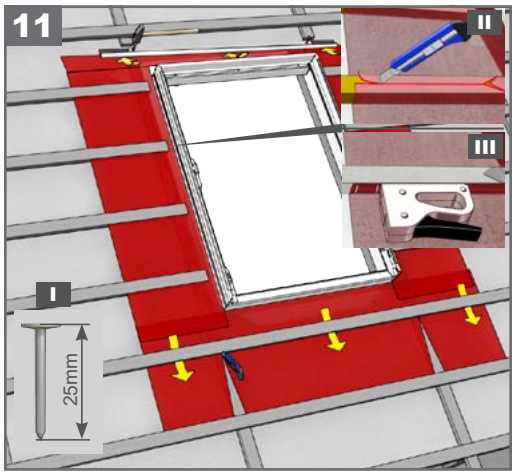
11
II
III
I
25mm

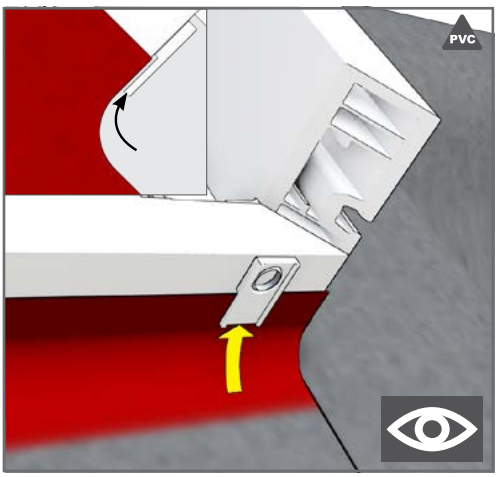
PVC

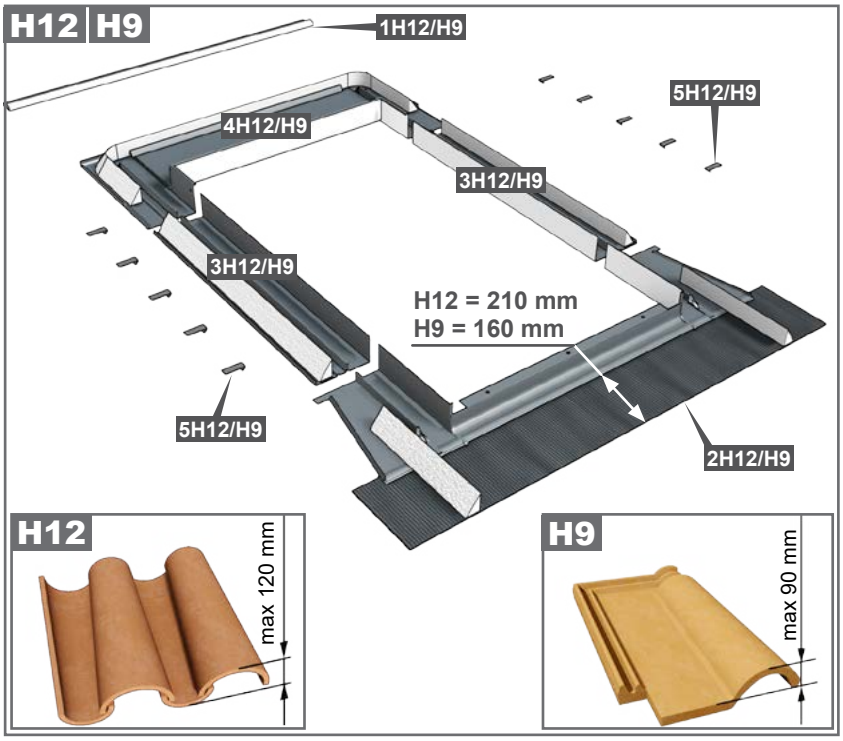
H12 H9
1H12/H9
4H12/H9
5H12/H9
3H12/H9
3H12/H9
H12 = 210 mm
H9 = 160 mm
5H12/H9
2H12/H9

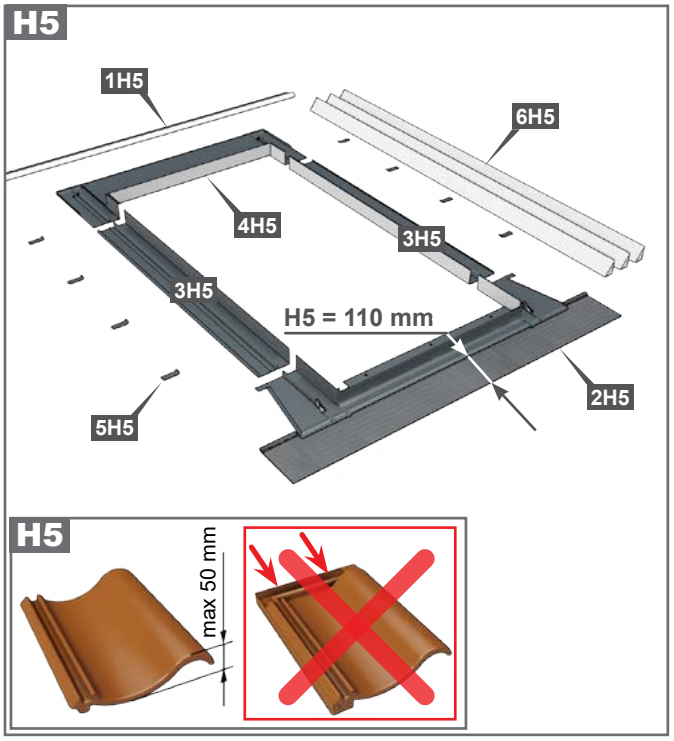
H5
1H5
6H5
4H5
3H5
3H5
H5 = 110 mm
5H5
2H5

H12
max 120 mm

H9
max 90 mm

H5
max 50 mm

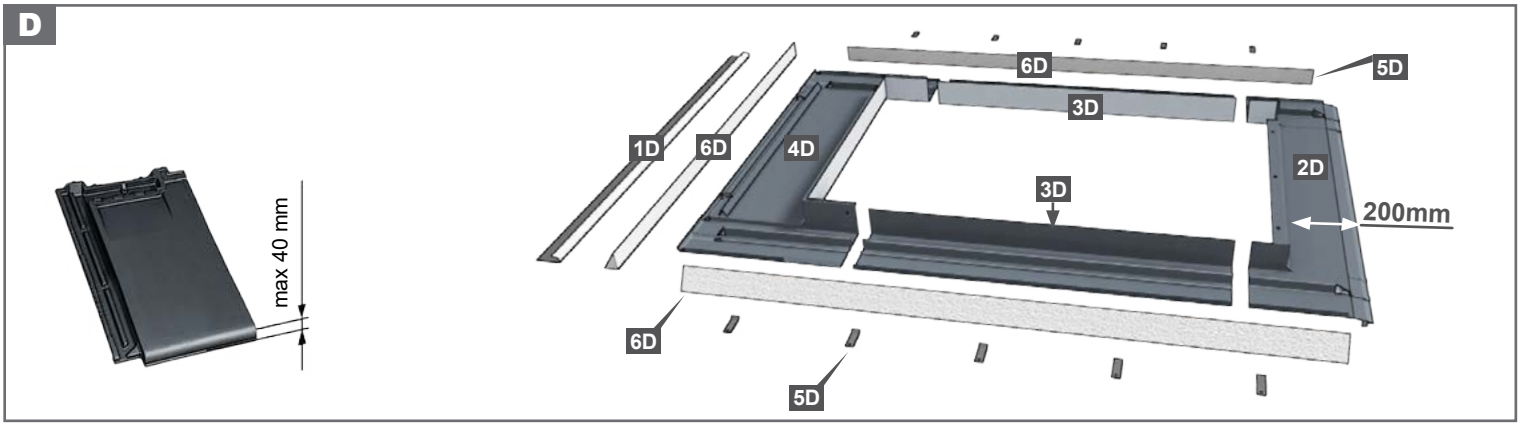
D
max 40 mm
6D
5D
3D
1D
6D
4D
2D
3D
200mm
6D
5D

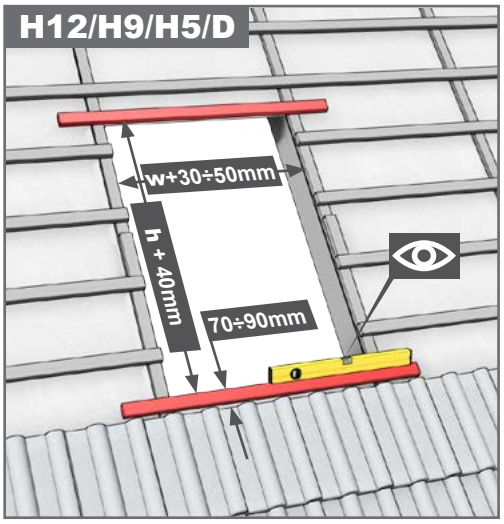
H12/H9/H5/D
w+30÷50mm
h + 40mm
70÷90mm

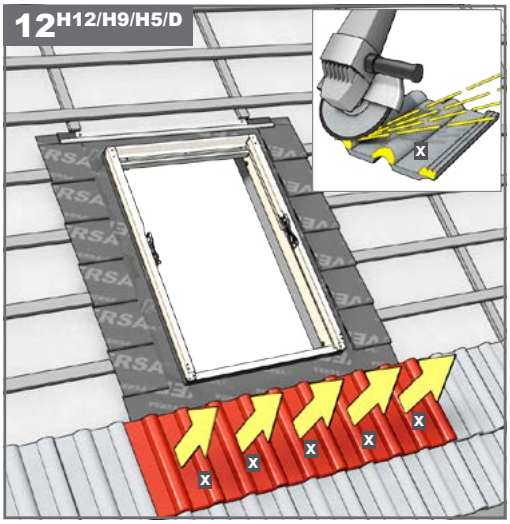
12H12/H9/H5/D
X

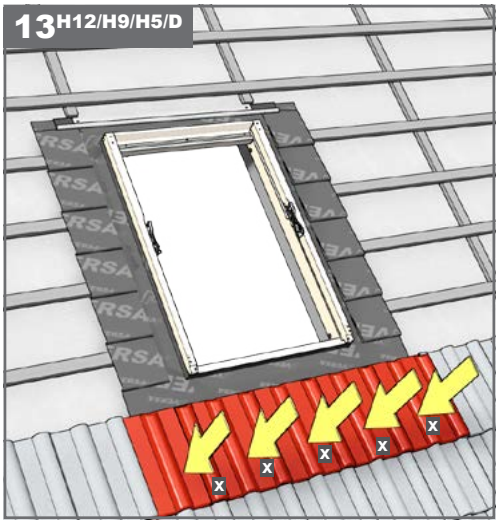
13H12/H9/H5/D
X

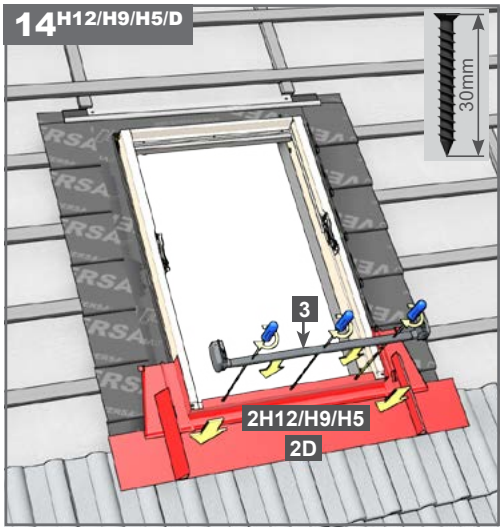
14H12/H9/H5/D
30mm
3
2H12/H9/H5
2D

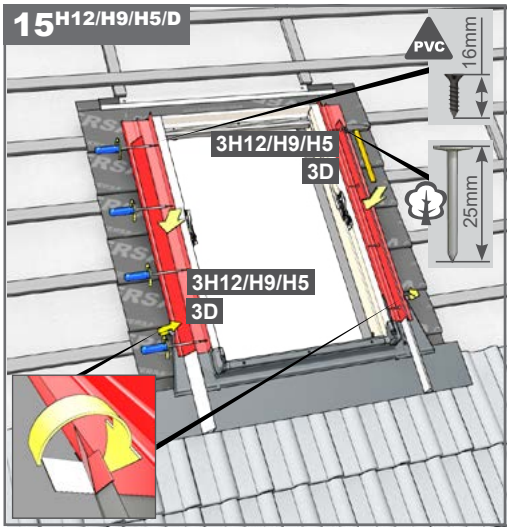
15H12/H9/H5/D
PVC
16mm
3H12/H9/H5
3D
25mm
3H12/H9/H5
3D

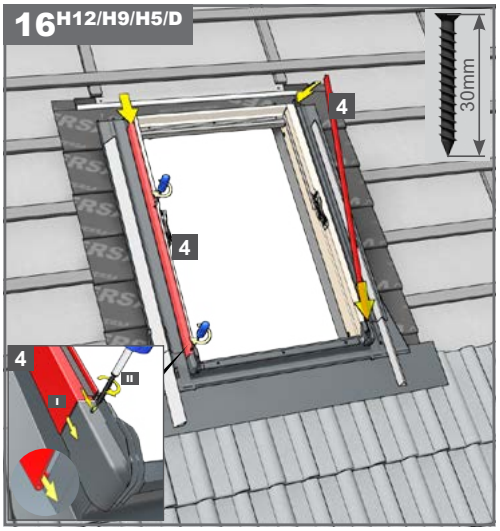
16H12/H9/H5/D
30mm
4
4
4
I
II

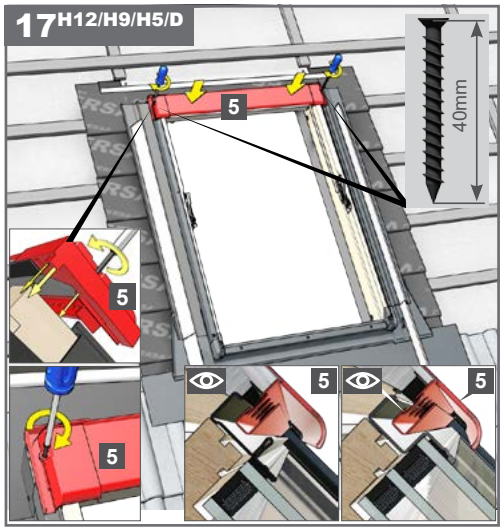
17H12/H9/H5/D
40mm
5
5
5
5
5

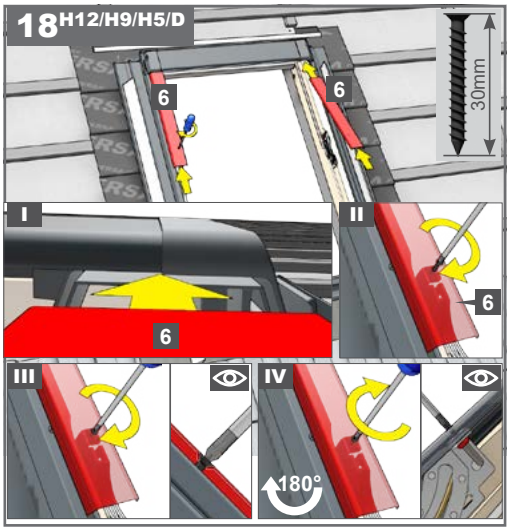
18H12/H9/H5/D
30mm
6
6
I
II
6
6
III
IV
180°

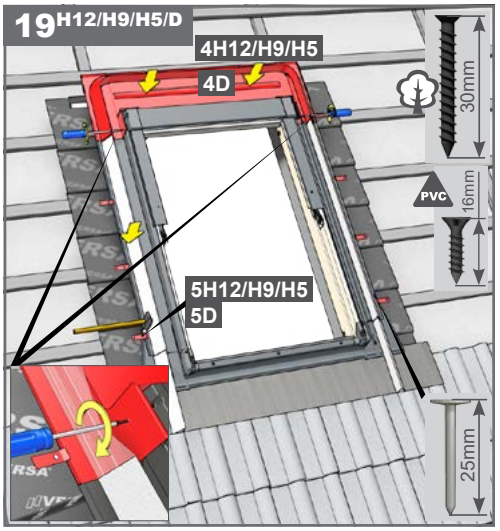
19H12/H9/H5/D
4H12/H9/H5
4D
30mm
PVC
16mm
5H12/H9/H5
5D
25mm

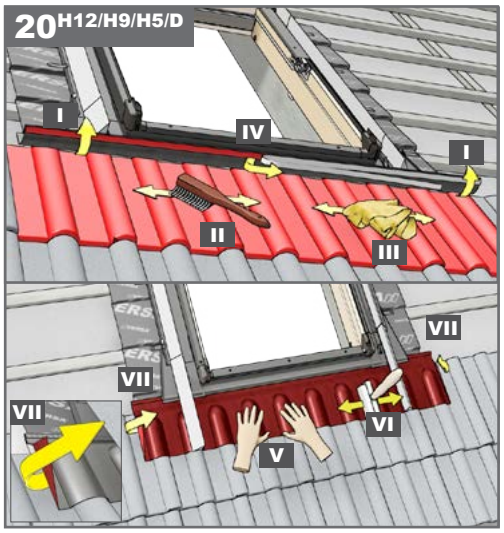
20H12/H9/H5/D
I
IV
I
II
III
VII
VII
VII
VI
V

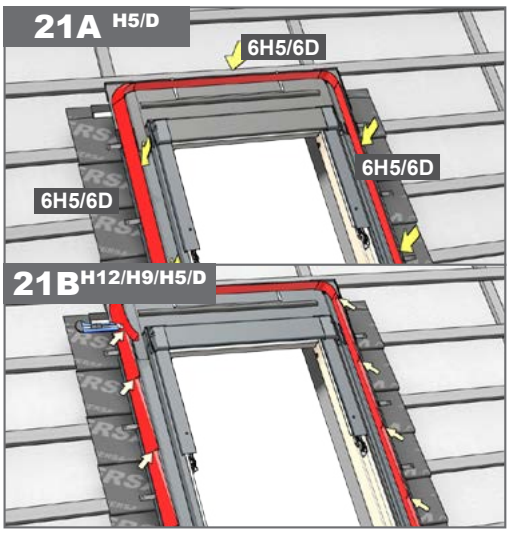
21A H5/D
6H5/6D
6H5/6D
6H5/6D
21B H12/H9/H5/D

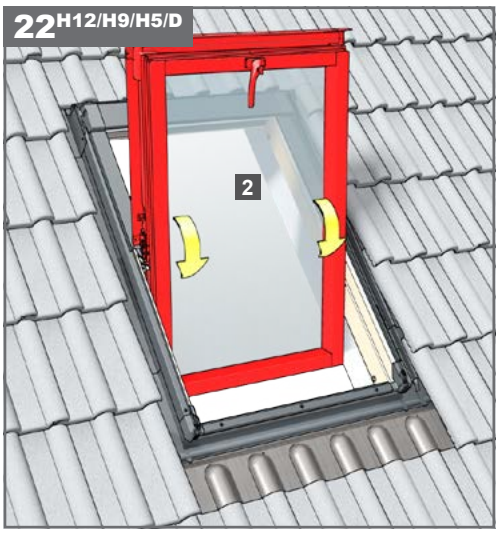
22H12/H9/H5/D
2

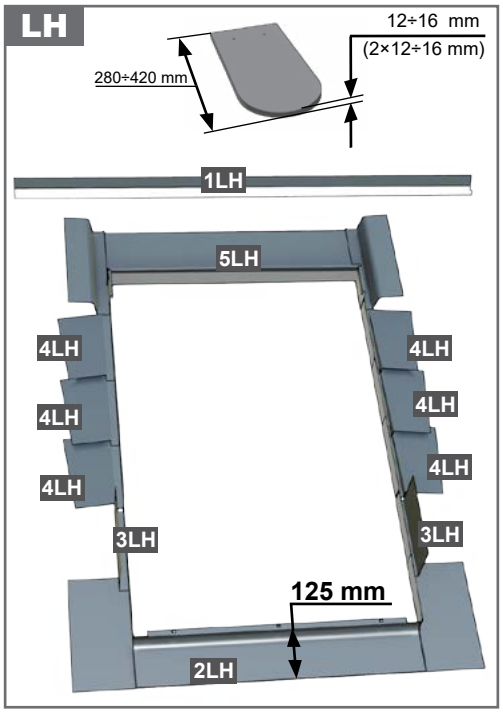
LH
12÷16 mm
(2×12÷16 mm)
280÷420 mm
1LH
5LH
4LH
4LH
4LH
4LH
4LH
4LH
3LH
3LH
125 mm
2LH

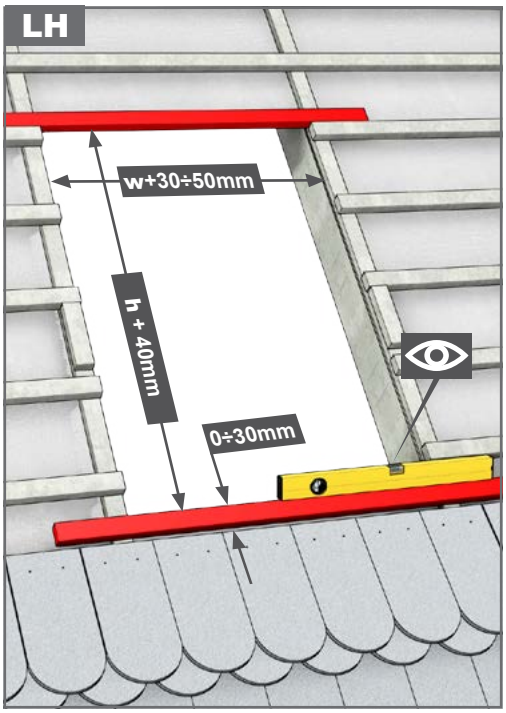
LH
w+30÷50mm
h + 40mm
0÷30mm

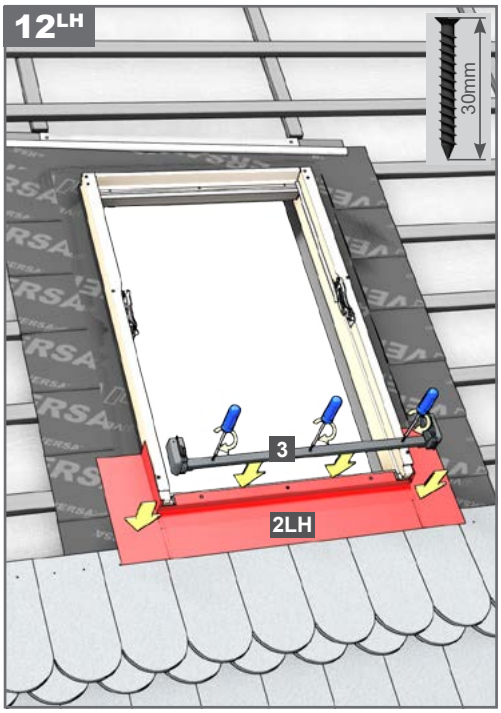
12LH
30mm
3
2LH

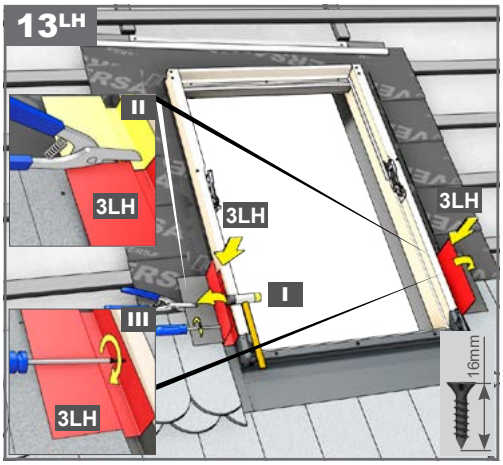
13LH
II
3LH
3LH
3LH
I
III
3LH
16mm

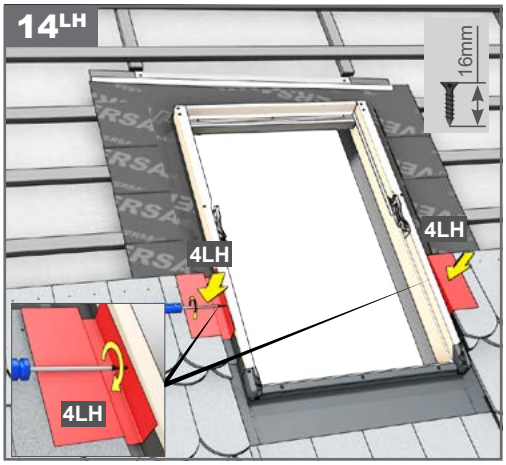
14LH
16mm
4LH
4LH
4LH

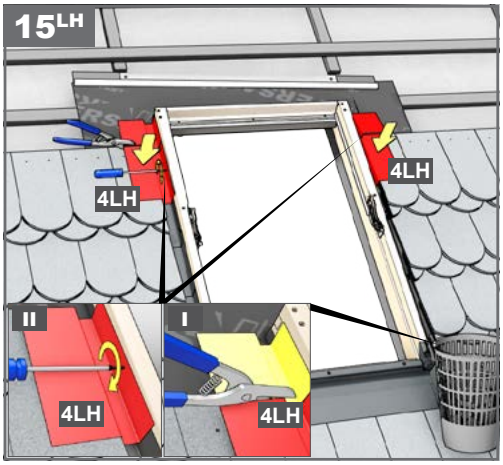
15LH
4LH
4LH
II
4LH
I
4LH

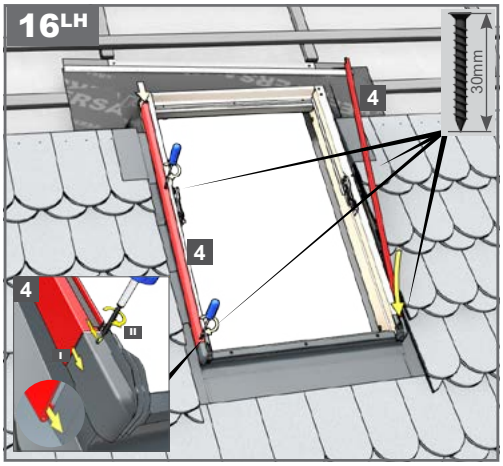
16LH
30mm
4
4
4
II
I

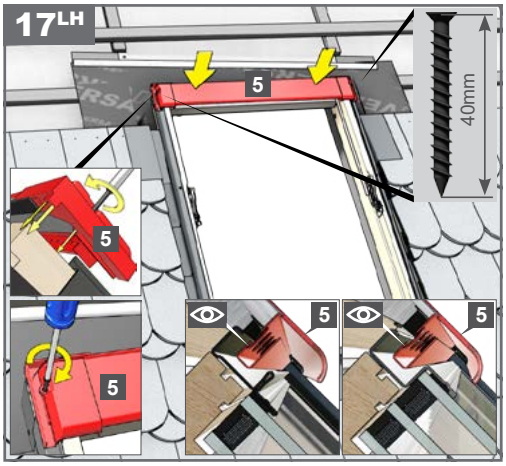
17LH
40mm
5
5
5
5
5

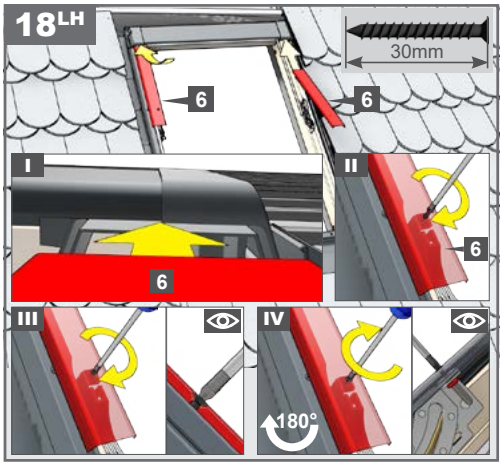
18LH
30mm
6
6
I
II
6
6
III
IV
180°

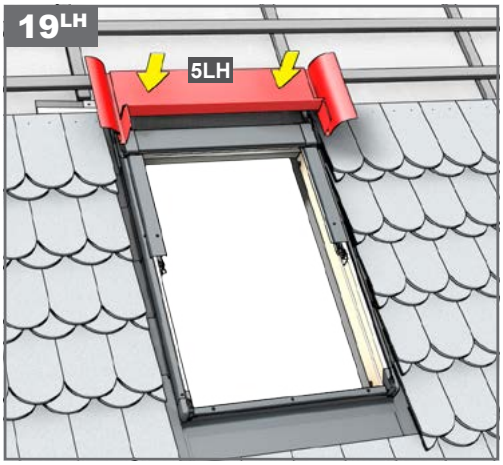
19LH
5LH

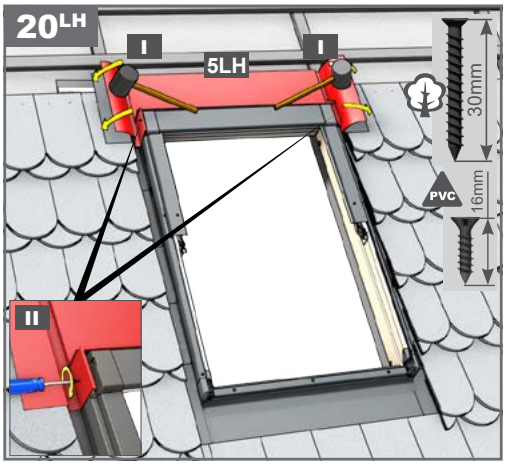
20LH
I
5LH
I
30mm
PVC
16mm
II

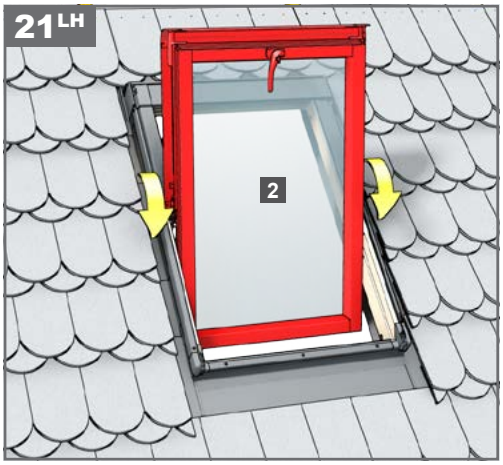
21LH
2

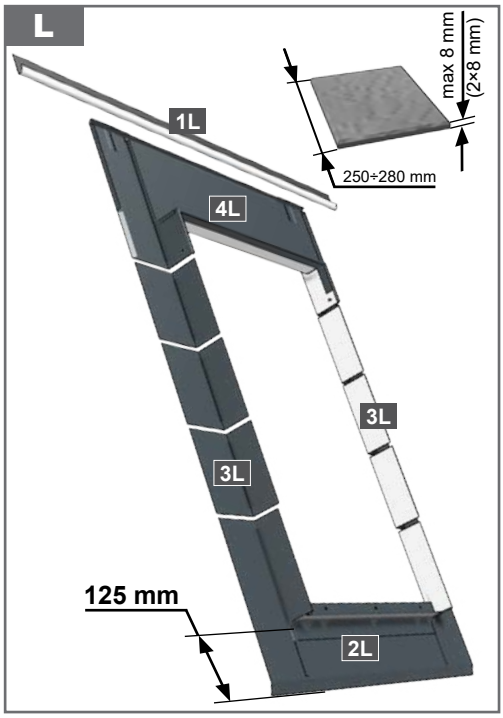
L
max 8 mm
(2×8 mm)
250÷280 mm
1L
4L
3L
3L
125 mm
2L

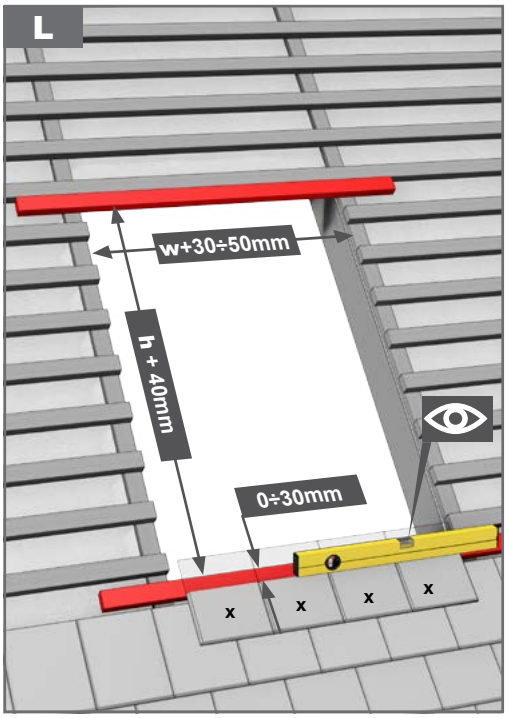
L
w+30÷50mm
h + 40mm
0÷30mm
x
x
x
x

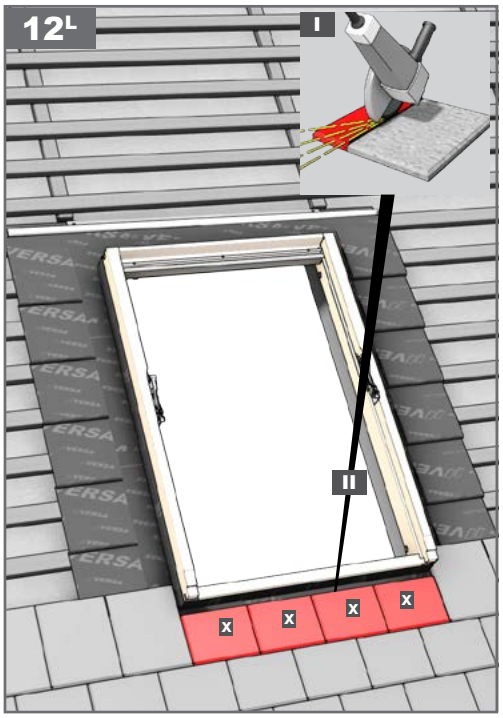
12L
I
II
x
x
x
x

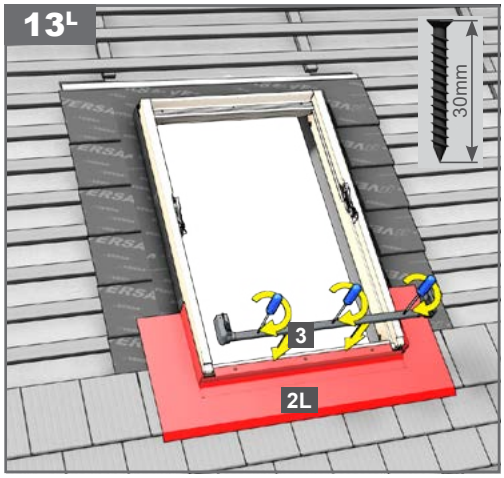
13L
30mm
3
2L

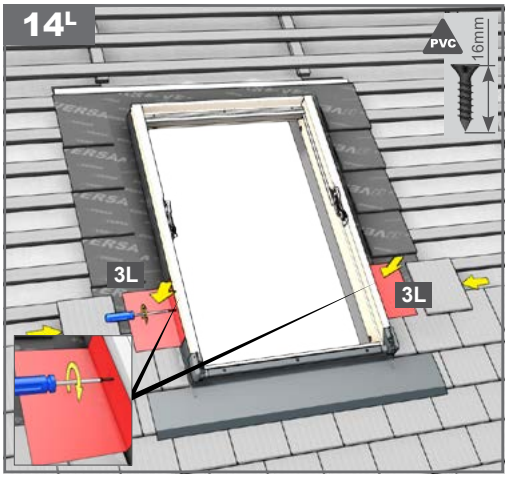
14L
PVC
16mm
3L
3L

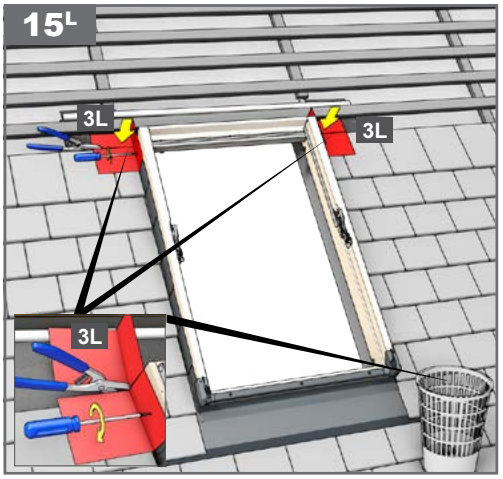
15L
3L
3L
3L

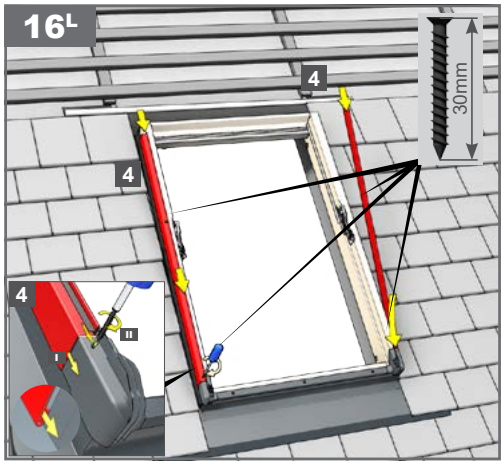
16L
30mm
4
4
4
I
II

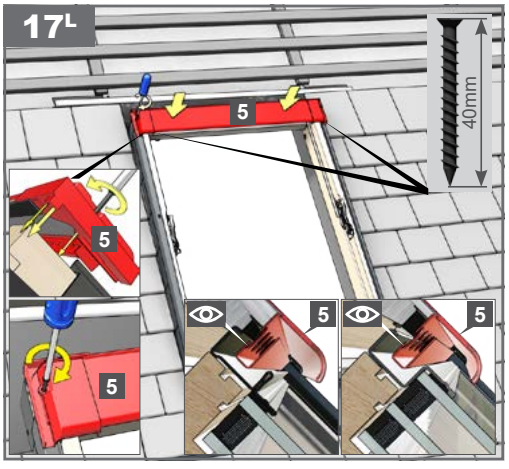
17L
40mm
5
5
5
5
5

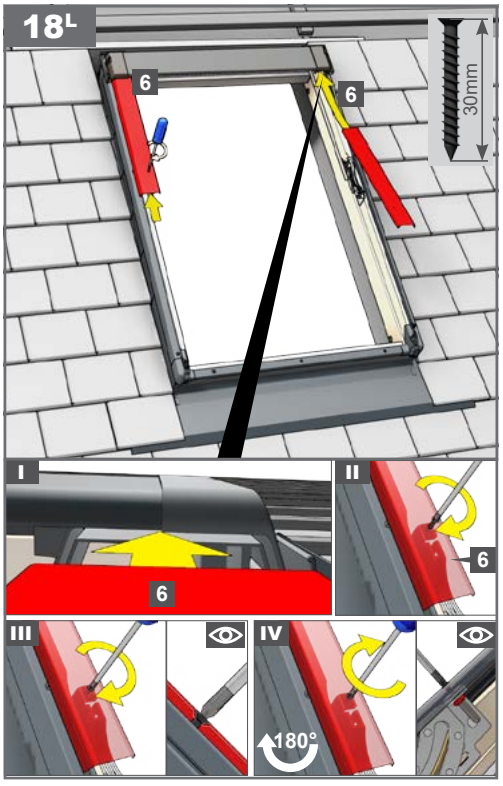
18L
30mm
6
6
I
6
II
6
III
IV
180°

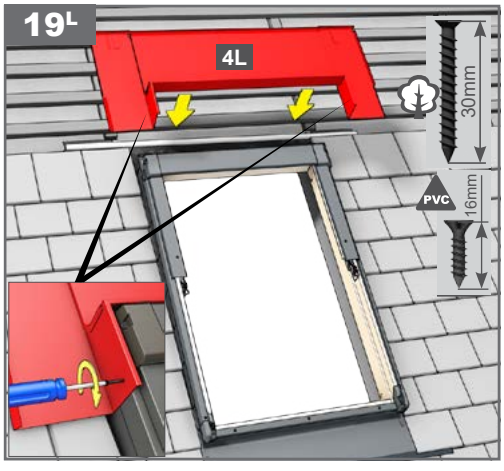
19L
4L
30mm
PVC
16mm

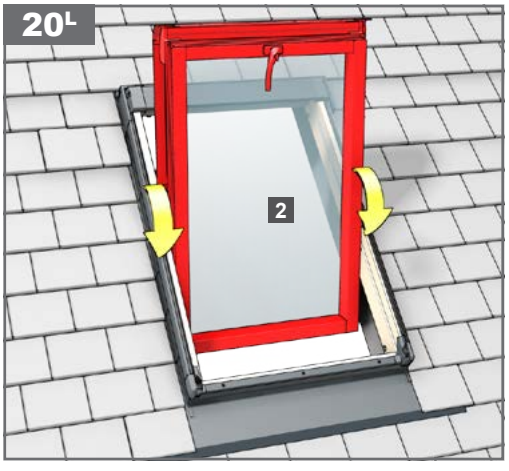
20L
2

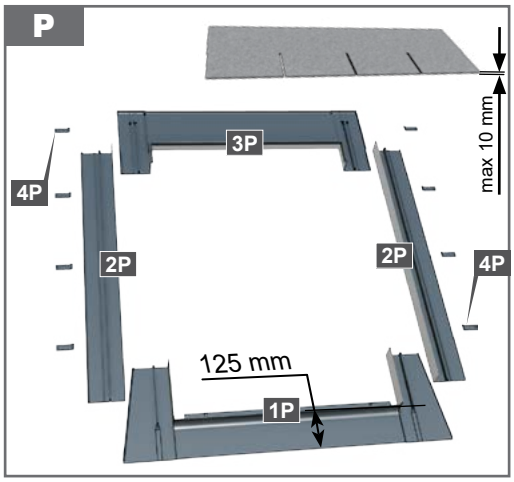
P
3P
4P
2P
2P
4P
max 10 mm
125 mm
1P

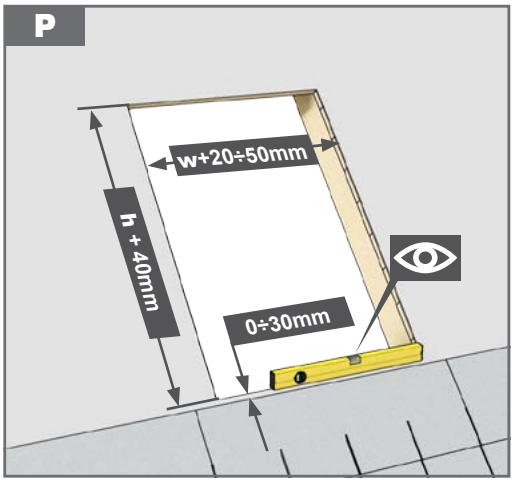
P
w+20÷50mm
h + 40mm
0÷30mm

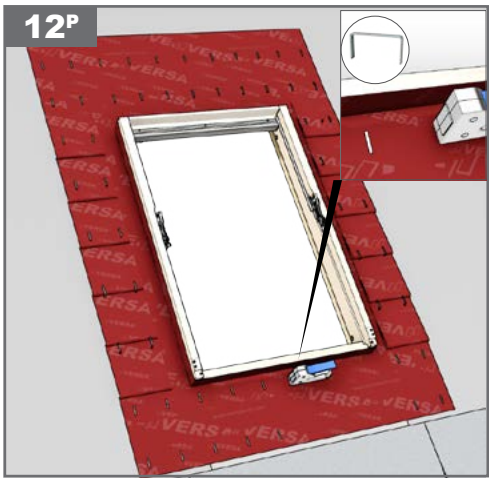
12P

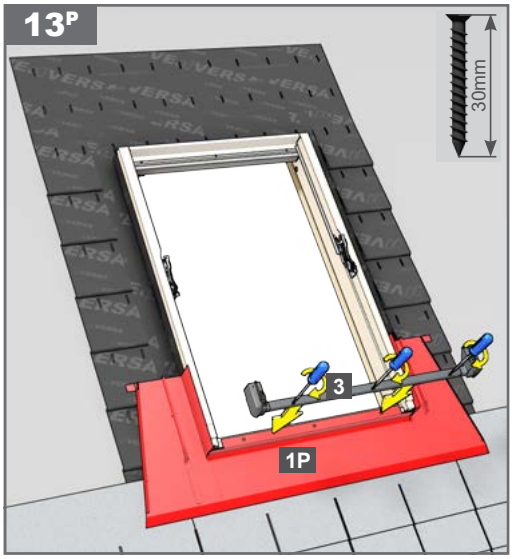
13P
30mm
3
1P

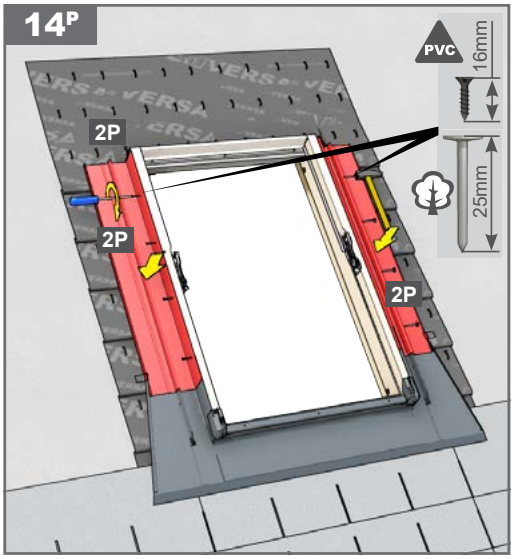
14P
PVC
16mm
25mm
2P
2P
2P

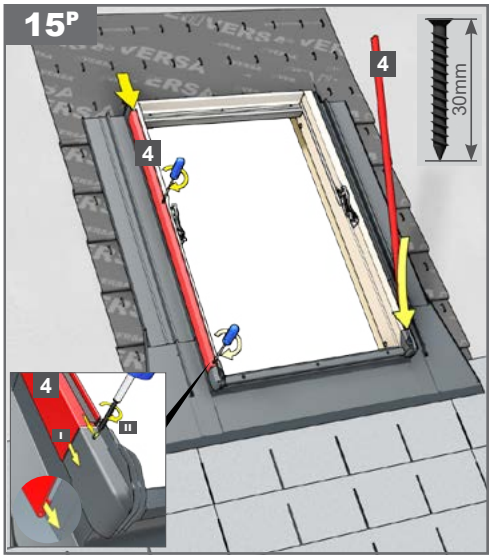
15P
4
4
30mm
4
I
II

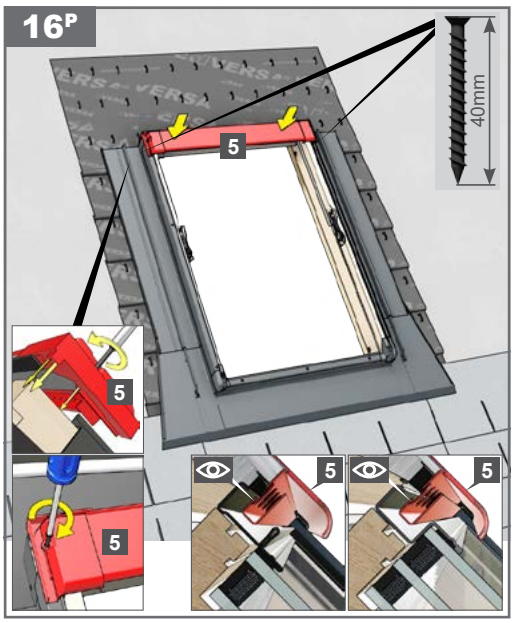
16P
40mm
5
5
5
5
5

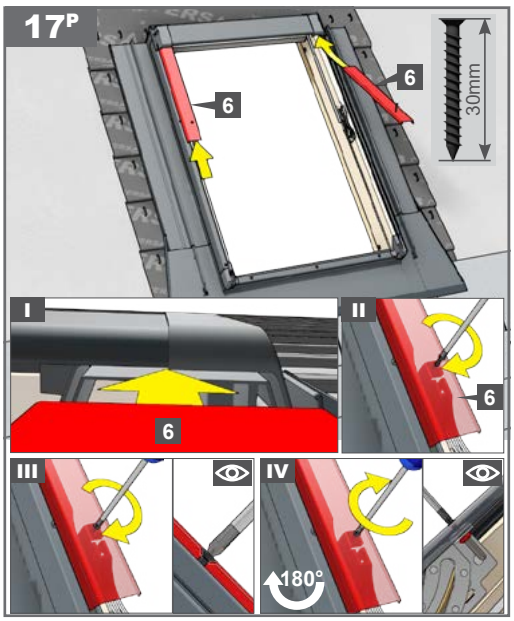
17P
6
6
30mm
I
II
6
6
III
IV
180°

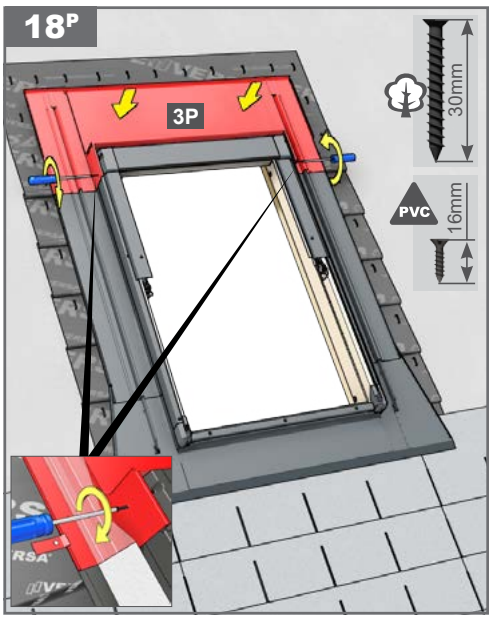
18P
3P
30mm
PVC
16mm

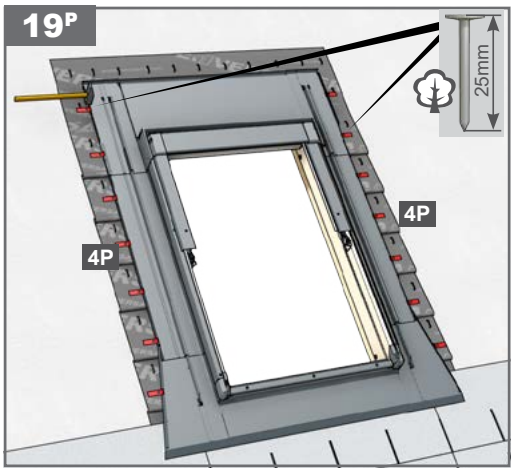
19P
25mm
4P
4P

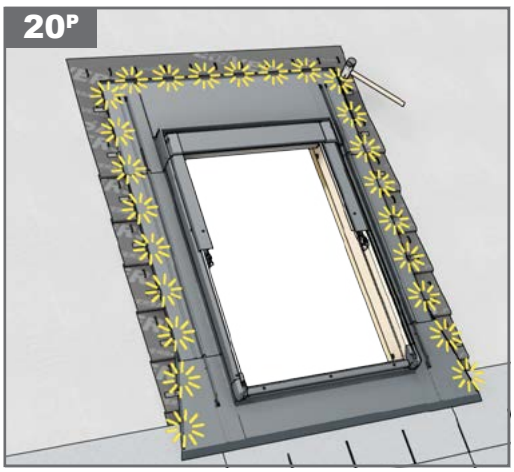
20P

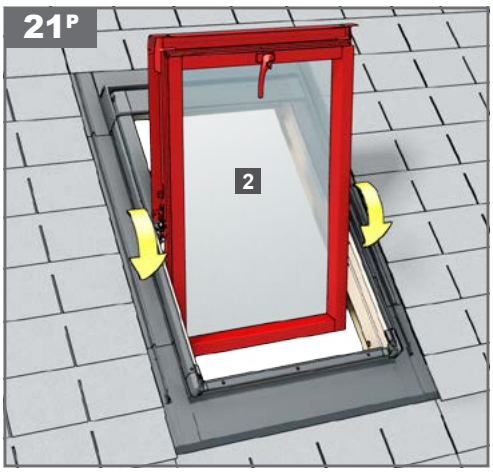
21P
2

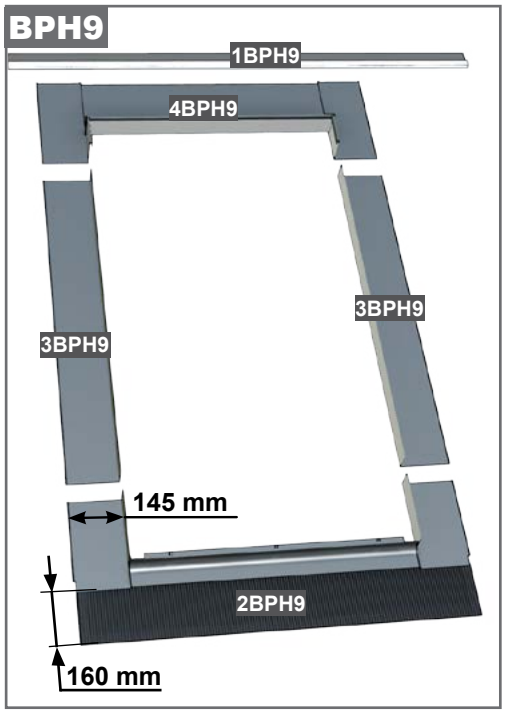
BPH9
1BPH9
4BPH9
3BPH9
3BPH9
145 mm
2BPH9
160 mm

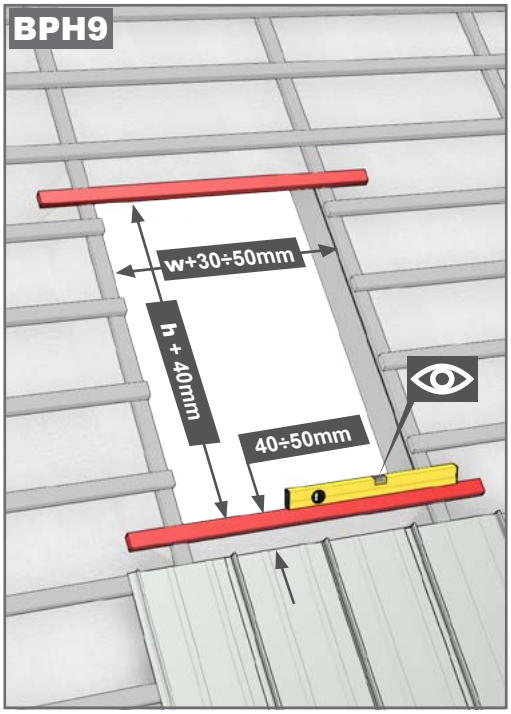
BPH9
w+30÷50mm
h + 40mm
40÷50mm

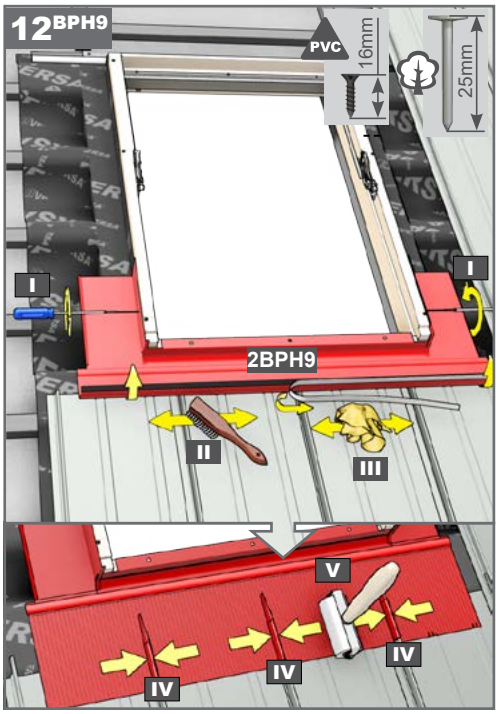
12BPH9
PVC
16mm
25mm
I
I
2BPH9
II
III
V
IV
IV
IV

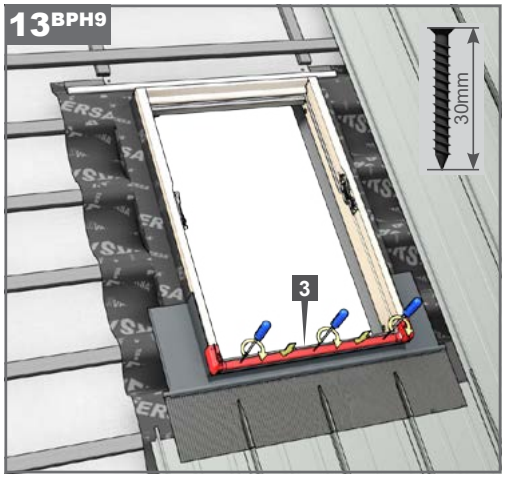
13BPH9
30mm
3

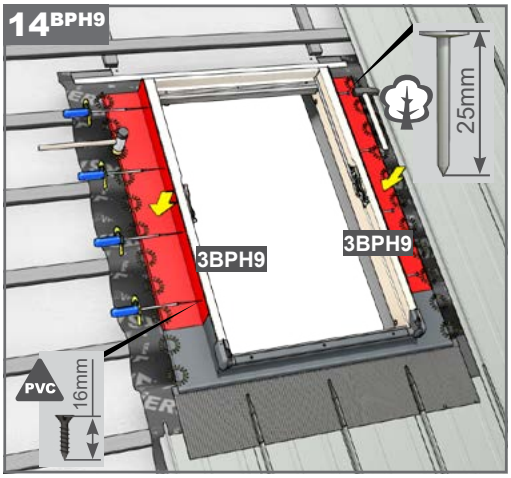
14BPH9
25mm
3BPH9
3BPH9
PVC
16mm

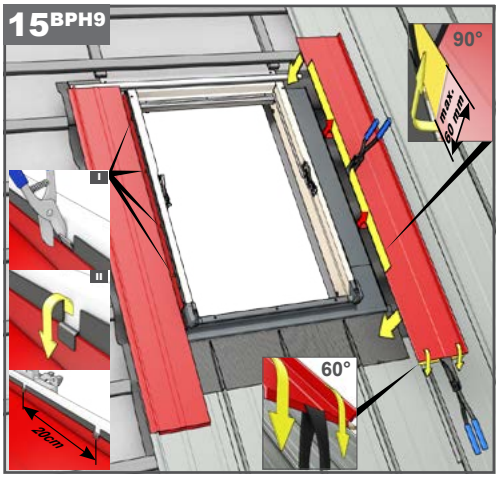
15BPH9
90°
max. 60 cm
I
II
20cm
60°

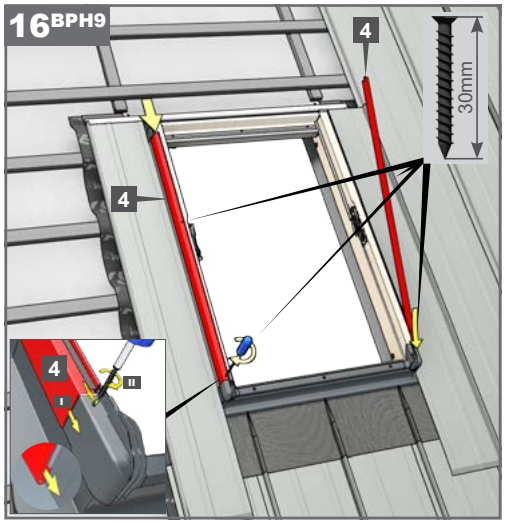
16BPH9
4
30mm
4
4
I
II

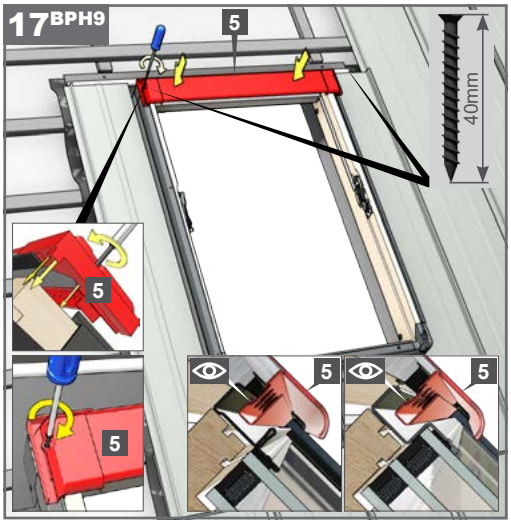
17BPH9
5
40mm
5
5
5
5
5

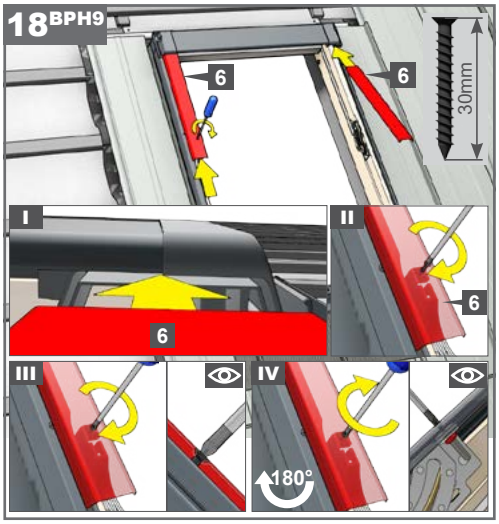
18BPH9
6
6
30mm
I
II
6
6
III
IV
180°

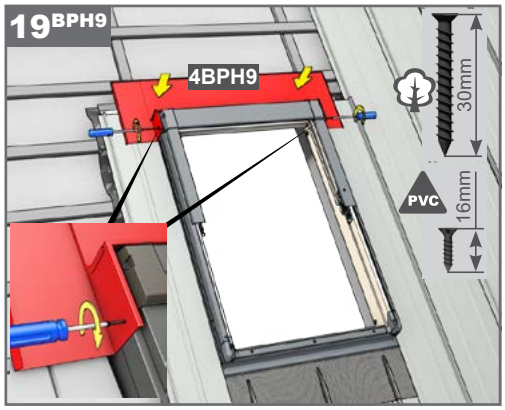
19BPH9
4BPH9
30mm
PVC
16mm


20BPH9
45°

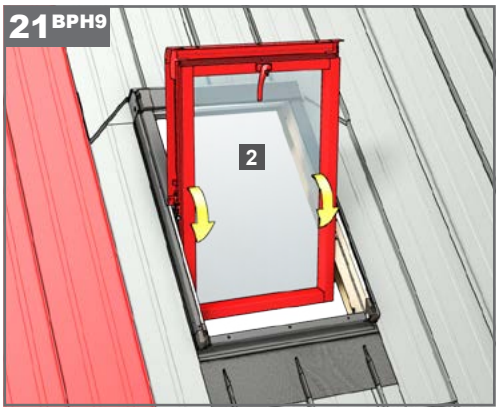
21BPH9
2

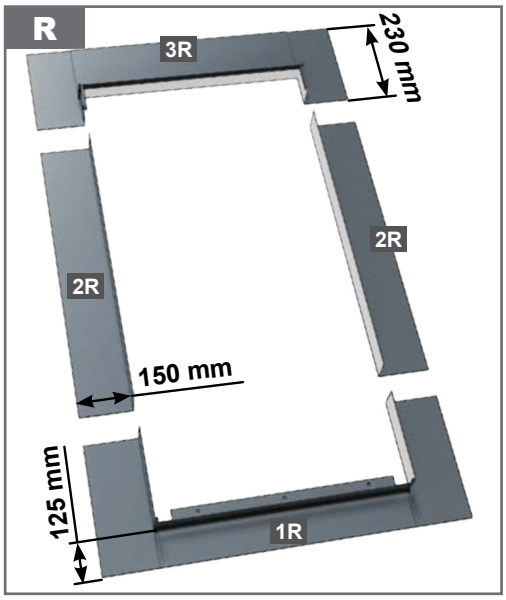
R
3R
230 mm
2R
2R
150 mm
125 mm
1R

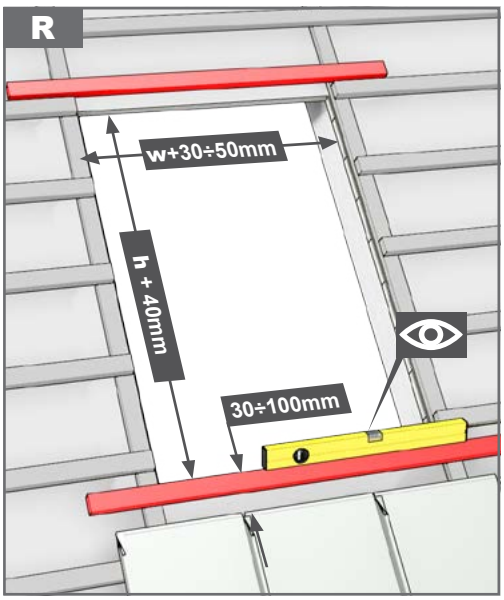
R
w+30÷50mm
h + 40mm
30÷100mm

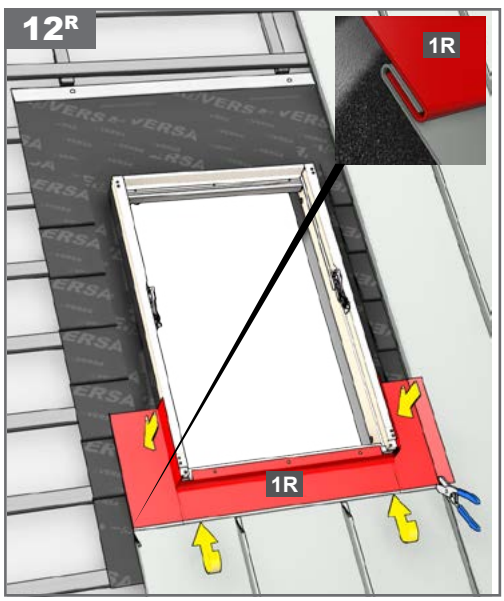
12R
1R
1R

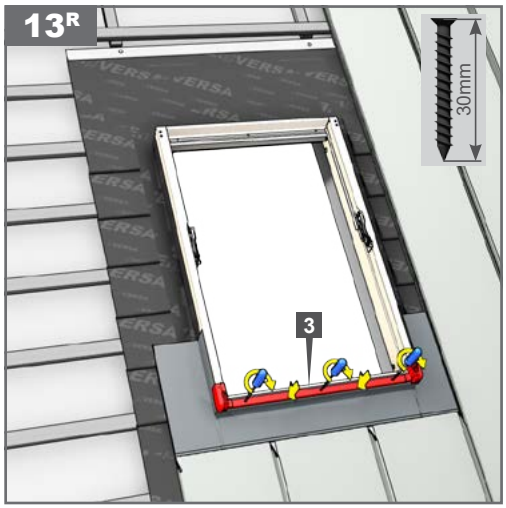
13R
30mm
3

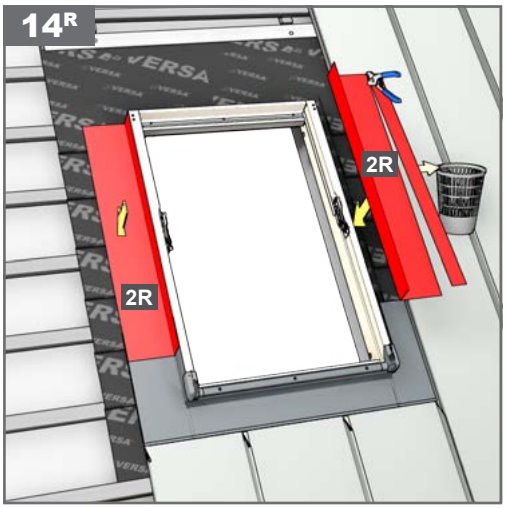
14R
2R
2R

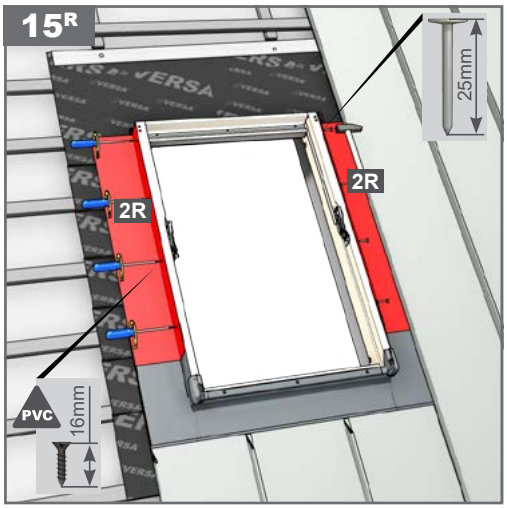
15R
25mm
2R
2R
PVC
16mm

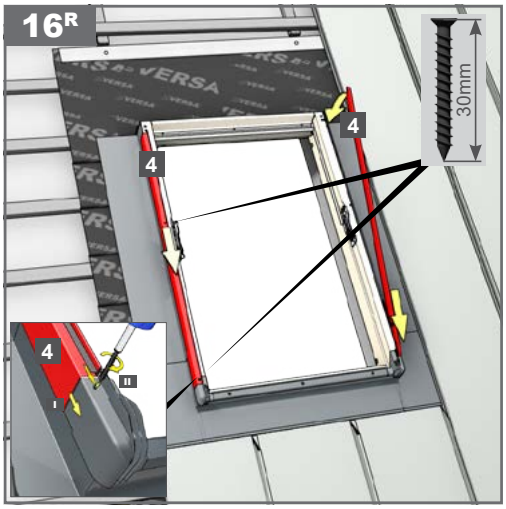
16R
30mm
4
4
4
II
I

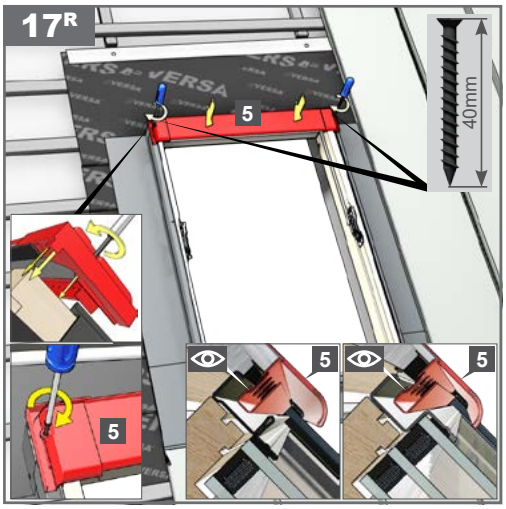
17R
40mm
5
5
5
5

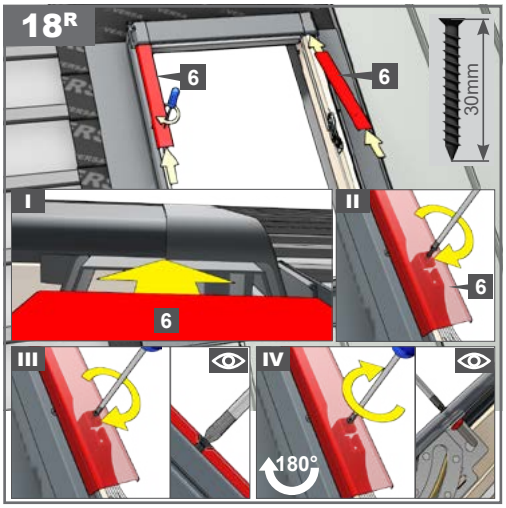
18R
30mm
6
6
I
II
6
6
III
IV
180°

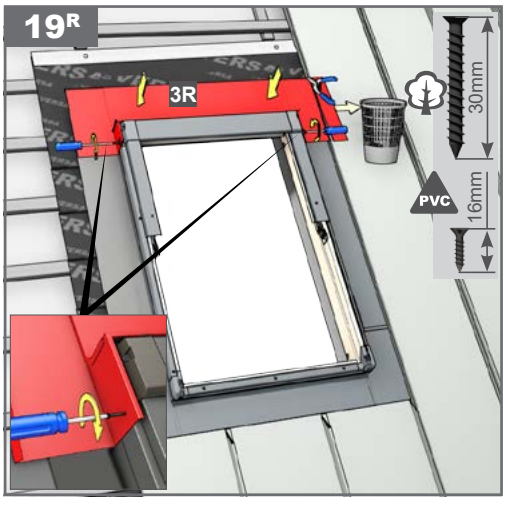
19R
3R
30mm
PVC
16mm

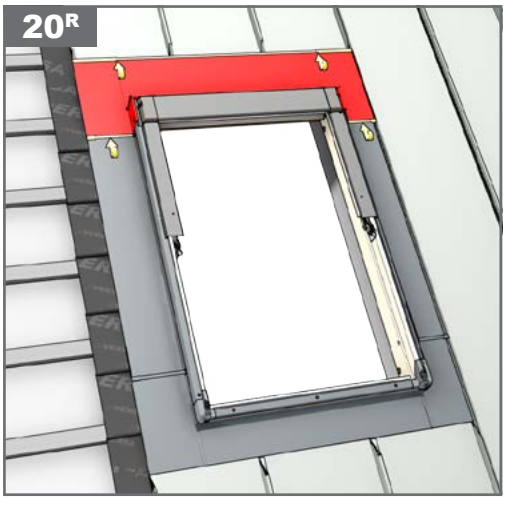
20R

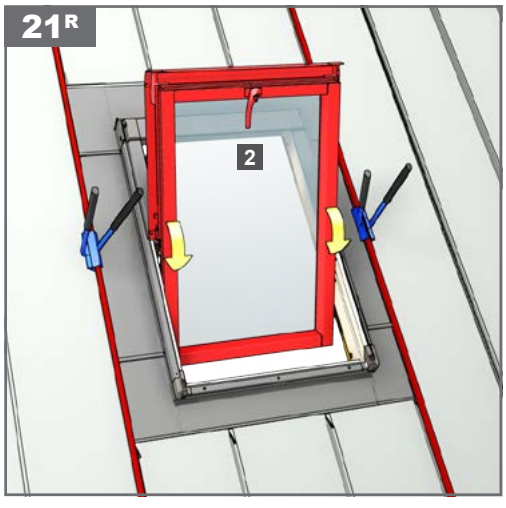
21R
2

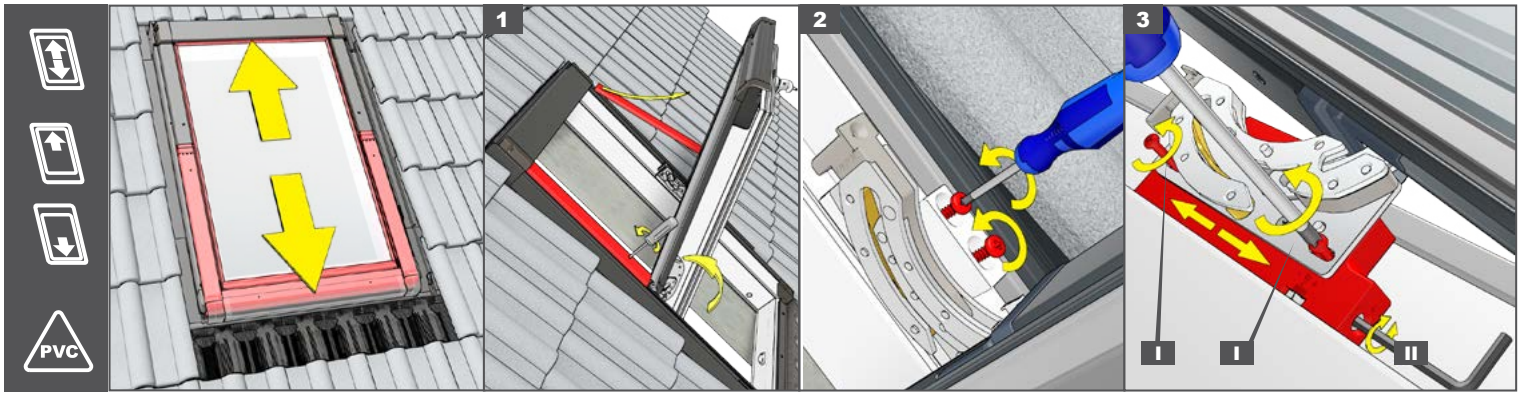

1×YEAR

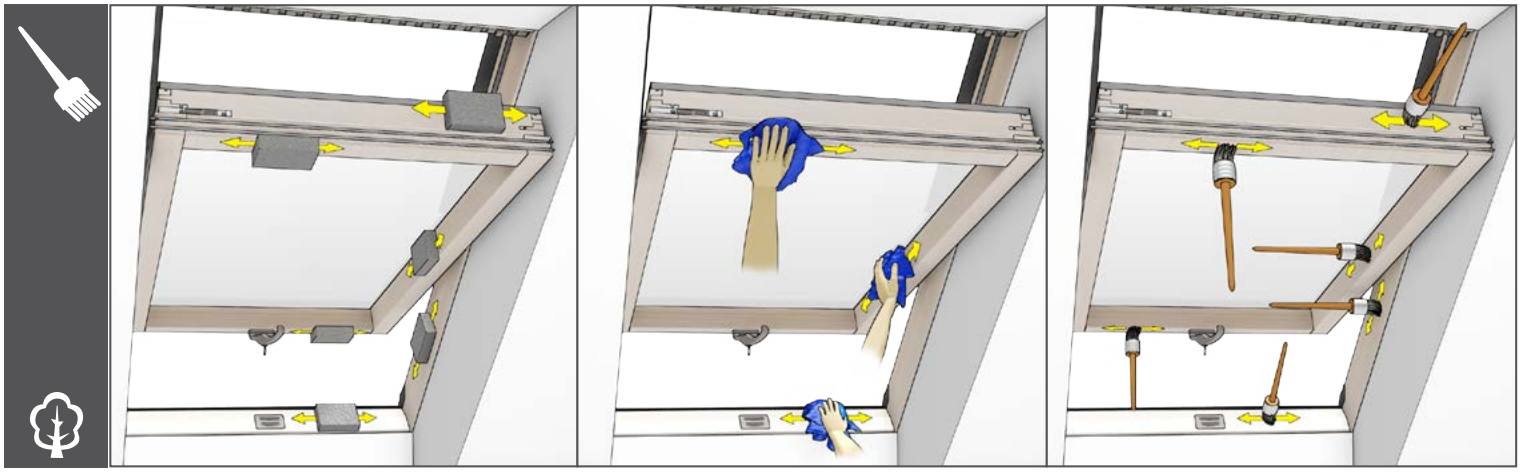

1×YEAR

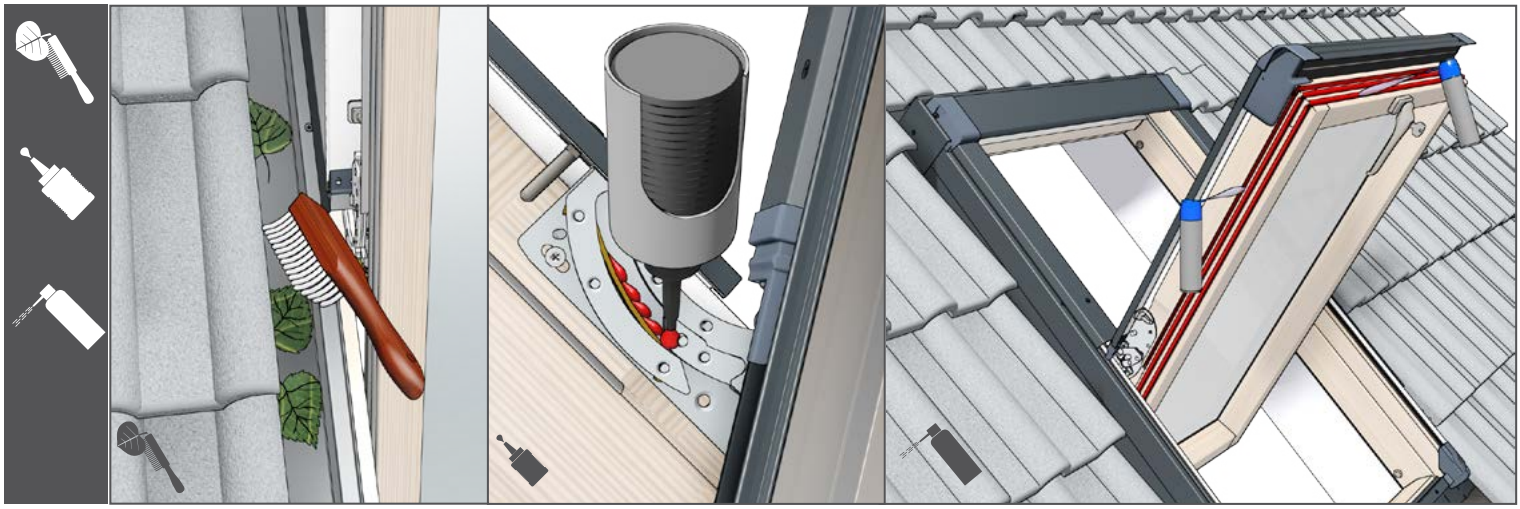

1×YEAR

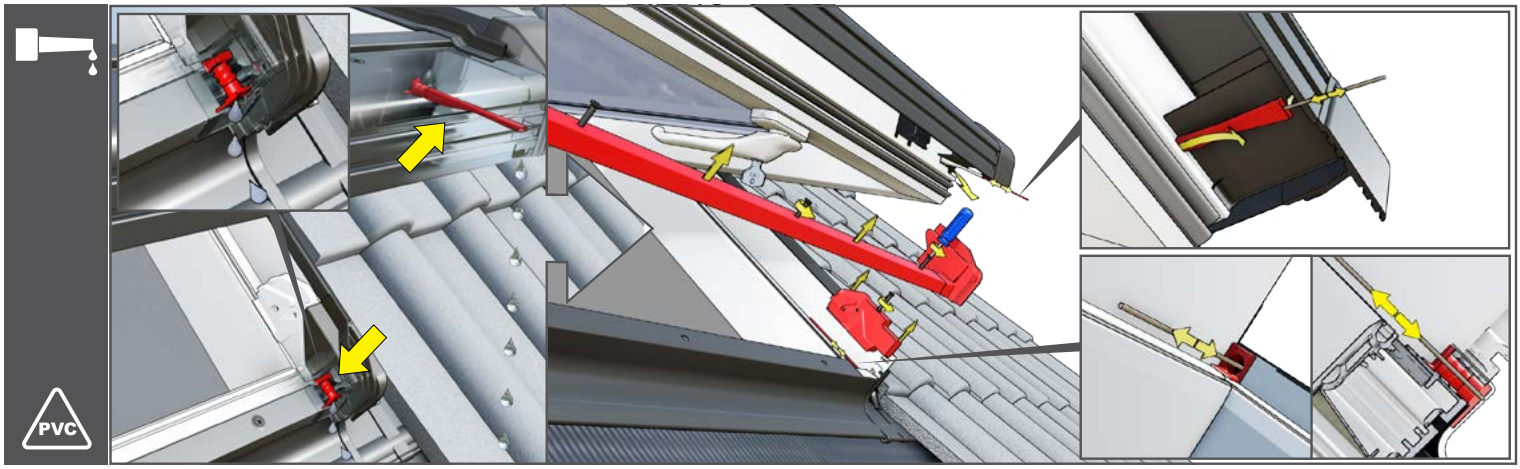

OKPOL® 49-318 Skarbimierz-Osiedle ul. Topolowa 24 • e-mail: okpol@okpol.pl serwis@okpol.pl

Producent zastrzega, iż nie będzie ponosić żadnej odpowiedzialności za nieprzestrzeganie wymogów bezpieczeństwa oraz przepisów prawa jak również prawa budowlanego przez właściciela, użytkownika, montażystę oraz architekta.

The manufacturer reserves that it will not incur any liability for failure to comply with safety requirements and laws as well as construction law by the owner, operator, fitter and architect.

OKPOL 09.2026